Manualslib.com - The Global Manuals Library

PANASONIC AG-527DVDE SERVICE MANUAL

Table of Contents

Initial Setup
TV / VCR Important Safeguards and Precautions / Safety Precautions
Before Using
Table of Contents
Information (Unit, Cassette, Disc)
Location of Controls
Connections
Initial Setup
TV-VCR
Reset Language, Channels, Clock, Time Zone Adjust

Record On a Tape
Copy Your Tapes (Dubbing)
DVD Basic DVD Operation
TV Operation
TV / VCR TV Operation
MTS Broadcast / TV Stereo System
Closed Caption System
TV Timer Features
On-Screen Display (OSD)
FM Radio
Timer Operation TV / VCR Timer Recording
TV / VCR Cable Box Universal Remote Control Feature
Tape Operation
Special VCR Features
V-Chip Control Feature
Audio Features
Video / Audio Menu
Video / Audio Adjustment
DVD
DVD Operation using On-Screen Displays
MP3 Playback Operation
DVD Lock Feature
DVD
Language Code List
TV / VCR Before Requesting Service
Warning and Instruction Displays
Index
Other ManualsLib Projects

ORDER NO. MKE0206606C1

D1

Service Manual

TV/DVD/VCR Combination

AG-527DVDE

SPECIFICATIONS

ITEM		SPECIFICATION
VCR	Video	Head: 4 rotary heads helical scanning system
		Input Level: VIDEO IN Jack (Phono type) 1.0 Vp-p 75Ω unbalanced Output Level: VIDEO OUT Jack (Phono type) 1.0 Vp-p 75Ω unbalanced Signal-to-Noise Ratio: SP: more than 43 dB LP/SLP: more than 41 dB Horizontal Resolution: Color/Monochrome: more: SP: 230 lines LP/SLP: 220 lines
	Audio	Head: Normal Mono: 1 stationary head Hi-Fi Stereo: 2 rotary heads
		Input Level: AUDIO IN Jack (Phono type) -10 dBv 50 kΩ unbalanced Output Level: AUDIO OUT Jack (Phono type) -8 dBv 1 kΩ unbalanced
		Frequency Response: Normal Mono: SP: 100 Hz-8 kHz LP: 100 Hz-6 kHz SLP: 100 Hz-5 kHz Hi-Fi Stereo: SP/LP/SLP: 20 Hz-20 kHz
		Signal-to-Noise Ratio: Normal Mono: SP: more than 42 dB LP/SLP: more than 40 dB Hi-Fi Stereo: SP/LP/SLP: more than 60 dB
		Wow and Flutter: Normal Mono: SP: Less than 0.2 % WRMS LP: Less than 0.3 % WRMS SLP: Less than 0.4 % WRMS Hi-Fi Stereo: Less than 0.015 % WRMS
	Tuner	Broadcast Channels: VHF 2~13, UHF 14~69 CABLE Channels: Midband A through I (14~22) Superband J through W (23~36) Hyperband AA~EEE (37~64) Lowband A-5~A-1 (95~99) Special CABLE channel 5A (01) Ultraband 65~94, 100~125
	Tape Speed	SP: 1-5/16 i.p.s (33.35 mm/s), LP: 21/32 i.p.s (16.67 mm/s), SLP: 7/16 i.p.s (11.12 mm/s) Record/Playback Time: 8 hr. with 160 min. type tape used in SLP mode FF/REW Time: Less than 2-1/2 min. (120 min. type tape) *Note: FF/REW Time may be exceed specification according to tape condition.

ITEM		SPECIFICATION
VCR	Tape Format	Tape width 12.7 mm (1/2 inch) high density tape
FM RADIO	Band Range	87.5 MHz-108.1 MHz
DVD	Discs Played	(1) DVD-VIDEO disc: 12 cm (5 inch) single-sided, single-layer 12 cm (5 inch) single-sided, double-layer 12 cm (5 inch) double-sided, double-layer (one layer per side) 8 cm (3 inch) single-sided, single-layer 8 cm (3 inch) single-sided, double-layer 8 cm (3 inch) double-sided, double-layer (one layer per side) (2) Compact disc(CD-DA, VIDEO CD): 12 cm (5 inch) disc, 8 cm (3 inch) disc
	Digital Audio Output	Optical connector
	Pickup	Wave length: 655 nm (DVD), 790 nm (Video CD/CD) Laser power: CLASS II
DISPLAY	Picture Tube	27 inch measured diagonal 100˚ deflection Picture Tube
GENERAL	Power	Source: 120 V AC±12 V AC, 60 Hz±3 Hz
		Consumption: Approx. 170 W (Power on), Approx. 3.5 W (Power off)
	Television System	EIA Standard (525 lines, 60 fields) NTSC Color Signal
	Operating Condition	5 ˚C-35 ˚C (41 ˚F-95 ˚F) (Temperature) 10 %-75 % (Humidity)
	Dimension (W x H x D)	772 mm x 654 mm x 550 mm (30-3/8 inch x 25-3/4 inch x 21 inch)
	Weight	42 kg (92.4 lbs.)

Weight and dimensions shown are approximate.
Designs and specifications are subject to change without notice.

© 2002 Matsushita Kotobuki Electronics Industries LTD. All rights reserved. Unauthorized copying and distribution is a violation of law.

⚠ WARNING

This service information is designed for experienced repair technicians only and is not designed for use by the general public.
It does not contain warnings or cautions to advise non-technical individuals of potential dangers in attempting to service a product.
Products powered by electricity should be serviced or repaired only by experienced professional technicians. Any attempt to service or repair the product or products dealt with in this service information by anyone else could result in serious injury or death.

Panasonic®

1. SAFETY PRECAUTIONS

1.1. GENERAL GUIDELINES

1. **IMPORTANT SAFETY NOTICE**
   There are special components used in this equipment which are important for safety. These parts are marked by ⚠ in the Schematic Diagrams, Circuit Board Layout, Exploded Views and Replacement Parts List. It is essential thatthese critical parts should be replaced with manufacturer's specified parts to prevent X-RADIATION, shock, fire, or other hazards. Do not modify the original design without permission of manufacturer.
2. **An Isolation Transformer should always be used during the servicing of Combination DVD VCR whose chassis is not isolated from the AC power line. Use a transformer of adequate power rating as this protects the technician from accidents resultingin personal injury from electrical shocks. It will also protect Combination DVD VCR from being damaged by accidental shorting that may occur during servicing.**
3. **When servicing, observe the original lead dress, especially the lead dress in the high voltage circuits. If a short circuit is found, replace all parts which have been overheated or damaged by the short circuit.**
4. **After servicing, see to it that all the protective devices such as insulation barriers, insulation papers, shield, and isolation R-C combinations are properly installed.**
5. **Before turning the receiver on, measure the resistance between B+ line and chassis ground. Connect (-) side of an ohmmeter to the B**

+ lines, and (+) side to chassis ground. Each line should have more resistance than specified,as follows :

B+ Line

Minimum Resistance

130 V

1 k Ω (Cold chassis ground)

27 V

180 Ω (Cold chassis ground)

17 V

110 Ω (Cold chassis ground)

6. **When the TV set is not used for a long period of time, unplug the power cord from the AC outlet.**
7. **Potentials, as high as 34.5 kV are present when this TV set is in operation. Operation of the TV set without the rear cover involves the danger of a shock hazard from the TV set power supply. Servicing should not be attempted by anyone who isnot thoroughly familiar with the precautions necessary when working on high voltage equipment. Always discharge the anode of the picture tube to the CRT ground of receiver before handling the tube.**
8. **After servicing make the following leakage current checks to prevent the customer from being exposed to shock hazards.**

1.2. LEAKAGE CURRENT COLD CHECK

1. **Unplug the AC cord and connect a jumper between the two prongs on the plug.**
2. **For physically operated power switches, turn power on. Otherwise skip step 2.**
3. **Measure the resistance value, with an ohmmeter, between the jumpered AC plug and each exposed metallic cabinet part on the receiver, such as screwheads, connectors, etc. When the exposed metallic part has a return path to the chassis, the readingshould be between 1 M Ω and 12 M Ω . When the exposed metal does not have a return path to the chassis, the reading must be infinity.**

1.3. LEAKAGE CURRENT HOT CHECK

1. **Plug the AC cord directly into the AC outlet.**
   Do not use a isolation transformer for this check.
2. **Connect a 1.5 k Ω , 10 W resistor, in parallel with a 0.15 μ F capacitor, between each exposed metallic part on the set and a good earth ground, as shown in Figure 1.**
3. **Use an AC voltmeter, with 1 k Ω /V or more sensitivity, to measure the potential across the resistor.**
4. **Check each exposed metallic part, and measure the voltage at each point.**
5. **Reverse the AC plug in the AC outlet and repeat each of the above measurements.**
6. **The potential at any point should not exceed 0.75 V RMS.**
   A leakage current tester (Simpson Model 229 equivalent) may be used to make the hot checks. Leakage current must not exceed 1/ 2 mA. In case a measurement is outside of the limits specified, there is a possibility of shock hazard, and thereceiver should be repaired and rechecked before it is returned to the customer.

Figure 1

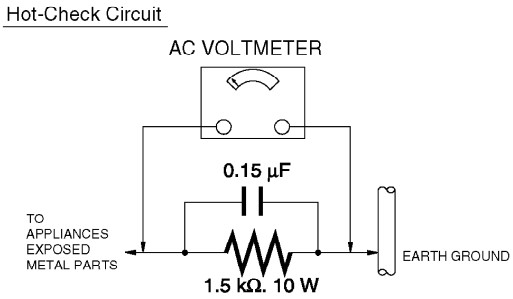

2. X-RADIATION

WARNING :

1. **The potential source of X-Radiation in TV sets is the High Voltage section and the picture tube.**
2. **When using a picture tube test fixture for service, ensure that the fixture is capable of handling 34.5 kV without causing X-Radiation.**

NOTE:

It is important to use an accurate periodically calibrated high voltage meter.

1. **Reduce the brightness to minimum.**
2. **Set the SERVICE switch to SERVICE .**
3. **Measure the High Voltage. The meter reading should indicate 32.0 kV±2.5 kV.**
   If the meter indication is out of tolerance, immediate service and correction is required to prevent the possibility of premature component failure.
4. **To prevent an X-Radiation possibly, it is essential to use the specified picture tube.**

2.1. HORIZONTAL OSCILLATOR DISABLE CIRCUIT TEST

SERVICE WARNING :
The test must be made as a final check before set is returned to the customer.

1. **With the rear cover removed, supply about a 120 V AC power source to the set, turn on the set.**
2. **Set the customer controls to normal operating positions.**
3. **Short between TP891 and TP892 on the Main circuit board with a jumper wire. Confirm that the picture goes out of horizontal sync.**
4. **If this does not occur, the horizontal oscillator disable circuit is not operating. Follow the Repair Procedures of horizontal oscillator disable circuit before the set is returned to customer.**

2.2. REPAIR PROCEDURES OF HORIZONTAL OSCILLATOR DISABLE CIRCUIT

1. **Connect a DC voltmeter between capacitor C513 (+) on the Main circuit board and chassis ground.**
2. **If approximately +21.5 V is not present at that point when 120 V AC is applied, find the cause. Check R503, R5505, C5507, C513 and D503.**
3. **Carefully check above specified parts and related circuits and parts. When the circuit is repaired, try the horizontal oscillator disable circuit test again.**

2.3. CIRCUIT EXPLANATION

2.3.1. HORIZONTAL OSCILLATOR DISABLE CIRCUIT

The positive DC voltage, supplied from the D503 cathode for monitoring high voltage, is applied to the IC5301 Pin11 through R503 and R5504. Under normal conditions, the voltage at IC5301 Pin 11 is less than approx. 3 V. If the high voltage at FlybackTransformer Pin 5 exceeds the specified voltage, the positive DC voltage which is supplied from the D503 cathode also increases. The increased voltage is applied to IC5301 Pin11 through R503 and R5504. Due to the increased voltage at IC5301 Pin11,the horizontal oscillator frequency increases, the picture goes out of horizontal sync, the beam current decreases and the picture become dark in order to keep X-radiation under specification.

Figure 2

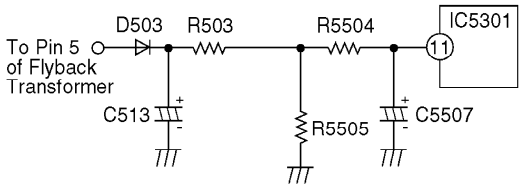

2.4. LASER PRODUCT

CLASS I LASER PRODUCT

- This equipment is certified to comply with DHHS Rules 21 CFR Chapter 1, Subchapter J in effect as of date of manufacture. (Only for U.S.A.)

This equipment is classified as a Class I (Class 1) level LASER Product and there is no hazardous LASER radiation with the safety protection.

Caution:

Use of controls or adjustments or performance of procedures other than those specified herein may result in hazardous radiation exposure.

Never touch the internal parts in order to avoid EXPOSURE TO VISIBLE LASER RADIATION.
Unplug the AC power cord to the equipment when opening the top cover.
When the power switch is On, do not place your eyes close to the front panel opening door or the other openings to look into the interior unit.
LASER Specification
Class I level A LASER Product (Class 1 level A LASER Product)

Wave Length:

647 - 677 nm (at DVD)
775 - 815 nm (at CD)

Laser Power:

No hazardous radiation is emitted with the safety protection.

2.5. PRECAUTION OF LASER DIODE

CAUTION:

This unit utilizes a class III a laser. Visible laser radiation is emitted from the optical pickup lens when the unit is turned on:

1. **Do not look directly into the pickup lens.**
2. **Do not use optical instruments to look at the pickup lens.**
3. **Do not adjust the preset variable resistor on the optical pickup.**
4. **Do not disassemble the optical pickup unit.**
5. **If the optical pickup is replaced, use the manufactures specified replacement pickup only.**
6. **Use of control or adjustment or performance of procedures other than those specified herein may result in hazardous radiation exposure.**

3. PREVENTION OF ELECTROSTATIC DISCHARGE (ESD) TO ELECTROSTATICALLY SENSITIVE (ES) DEVICES

Some semiconductor (solid state) devices can be damaged easily by static electricity. Such components commonly are called Electrostatically Sensitive (ES) Devices. Examples of typical ES devices are integrated circuits and some field-effect transistorsare semiconductor "chip" components. The following techniques should be used to help reduce the incidence of component damage caused by electrostatic discharge (ESD).

1. **Immediately before handling any semiconductor component or semiconductor-equipped assembly, drain off any ESD on your body touching a known earth ground. Alternatively, obtain and wear a commercially available discharging ESD wrist strap, whichshould be removed for potential shock reasons prior to applying power to the unit under test.**
2. **After removing an electrical assembly equipped with ES devices, place the assembly on a conductive surface such as aluminum foil, to prevent electrostatic charge buildup or exposure of the assembly.**
3. **Use only a grounded-tip soldering iron to solder or unsolder ES devices.**
4. **Use only an anti-static solder removal device. Some solder removal devices not classified as "anti-static (ESD protected)" can generate electrical charge sufficient to damage ES devices.**

5. Do not use freon-propelled chemicals. These can generate electrical charges sufficient to damage ES devices.
6. Do not remove a replacement ES device from its protective package until immediately before you are ready to install it. (Most replacement ES devices are packaged with leads electrically shorted together by conductive foam, aluminum foil or comparableconductive material).
7. Immediately before removing the protective material from the leads of a replacement ES device, touch the protective material to the chassis or circuit assembly into which the device will be installed.
   CAUTION:
   Be sure no power is applied to the chassis or circuit, and observe all other safety precautions.
8. Minimize bodily motions when handling unpackaged replacement ES devices. (Otherwise harmless motion such as the brushing together of your clothes fabric or the lifting of your foot from a carpeted floor can generate static electricity (ESD)sufficient to damage an ES device).

"NOTE to CATV system installer :

This reminder is provided to call the CATV system installer's attention to Article 820-40 of the NEC that provides guidelines for proper grounding and, in particular, specifies that the cable ground shall be connected to the grounding systemof the building, as close to the point of cable entry as practical."

4. OPERATION GUIDE

5. SERVICE NOTES (PLEASE READ)

5.1. SERVICE NOTES

5.1.1. SIMPLIFIED FAULT FINDING DATA

Simplified Self-Diagnostic System facilitates finding the cause of the fault. A 4 digit fault code and communication for I2C bus code will be displayed on TV screen.
The Simplified Fault finding data is stored in the Memory IC (IC6004). This data is cleared after it is displayed, and then the POWER button is pressed back on.

1. With power turned off, press FF and REW buttons on unit together for over 3 seconds.

Fig. 1-1

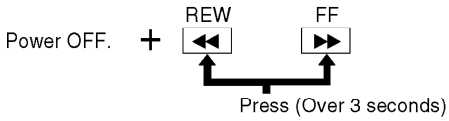

2. TV power comes on and the unit goes into service mode. 4 digit for fault code and communication for I²C bus code will be displayed.

Fig. 1-2

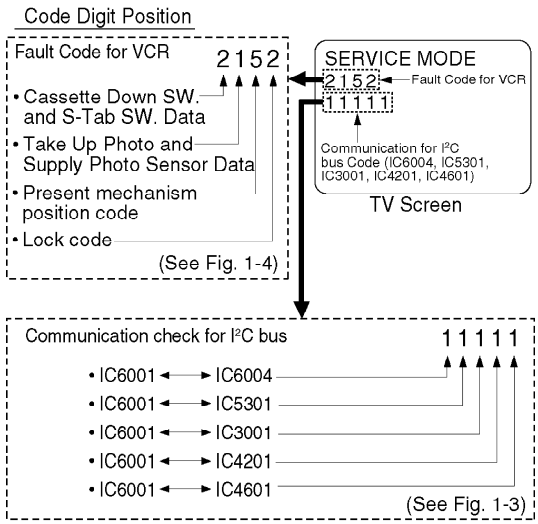

Fig. 1-3

(Communication check for I²C bus)

Explanation of Codes	Code No.				
Communication check for I²C bus (IC6001◄►IC6004) ----- **NG** / **OK**	0 / 1				
Communication check for I²C bus (IC6001◄►IC5301) ----- **NG** / **OK**		0 / 1			
Communication check for I²C bus (IC6001◄►IC3001) ----- **NG** / **OK**			0 / 1		
Communication check for I²C bus (IC6001◄►IC4201) ----- **NG** / **OK**				0 / 1	
Communication check for I²C bus (IC6001◄►IC4601) ----- **NG** / **OK**					0 / 1

Fig. 1-4

(Fault Code for VCR)

Explanation of Codes	Code No.			
S-Tab SW. Data • S-Tab SW. is off. • S-Tab SW. is on.	1 2			
Take Up and Supply Photo Sensor Data • No light detected at either sensor. • Take Up Photo Sensor detected at beginning of tape. • Supply Photo Sensor detected at end of tape. • Light detected at both sensors.		1 2 3 4		
Present Mechanism Position Code Mechanism Position is indicated. (Refer to Fig. 1-5.)			1 2 3 4 5 6 7 8 9 A B C D	
Lock Code (See Note) • VCR is not in shut-off condition. • Reel lock. • Cylinder lock. • Exceeds loading/unloading time. (Mechanism Lock) • Exceeds Cassette loading/unloading time. (Cassette Lock) Tape Unloading (direction) Tape Loading (direction)			 1 2	0 1 2 3 4 4

Fig. 1-5

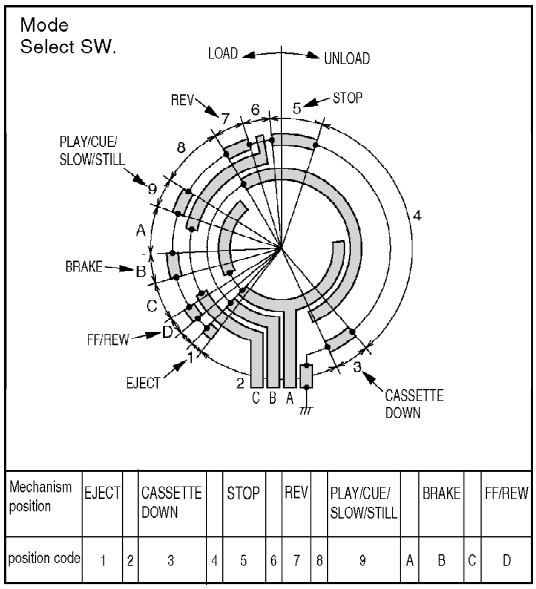

Mechanism position	EJECT		CASSETTE DOWN		STOP		REV		PLAY/CUE/ SLOW/STILL		BRAKE		FF/REW
position code	1	2	3	4	5	6	7	8	9	A	B	C	D

3. Press any operation button except for POWER or PLAY (DVD) on either the unit, or the remote to detect that a key has been pressed. The 1st digit changes to "0" only when key is detected.

Fig. 1-6

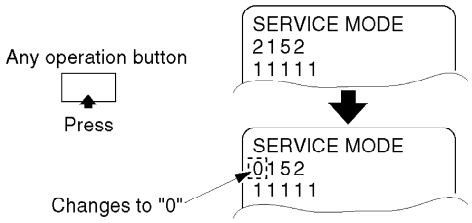

Note:

When 1 to 4 listed in Lock code occurs, the VCR stops and all VCR function buttons except for power become non-operational.

5.1.2. SELF-DIAGNOSTIC TEST FUNCTION FOR DVD

This unit has a Self-Diagnostic function which detects a problem or malfunction within the unit and displays its corresponding Error code on TV Screen.

Note:

If, after approx. 30 seconds, a unit set to DVD mode automatically switches to VCR mode, there is likely a problem with the DVD Decoder C.B.A. (IC8000, IC8100, IC8200, etc.)

5.1.2.1. How to enter DVD Self-Diagnostic mode

1. **Insert a DVD disc into the DVD Unit.**
2. **Set the unit to DVD mode. Then, press STOP button to stop playback.**
   Note:
   Do not let a DVD play during DVD Self-Diagnostic mode.
3. **Press and hold STOP/EJECT, PLAY/REPEAT, and VOL- buttons of VCR operation panel of the unit together for over 5 seconds with no cassette inserted. The adjustment overlay will appear on the TV screen.**

Fig. 2-1

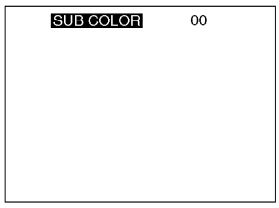

4. **Press DISPLAY key on the remote control to enter DVD Self-Diagnostic mode.**

Fig. 2-2

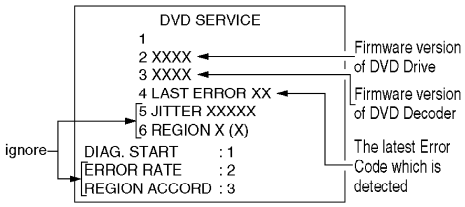

5. Press ”1” key on the remote control. The DVD Self-Diagnostic Test function will start automatically.

Fig. 2-3

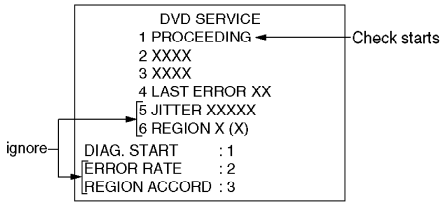

6. After a few minutes (approx. 1~5 minutes), the check results will appear on TV screen.

- If no error is detected, "COMPLETED" will appear as shown in Fig. 2-4. Be sure to press Power OFF to end. Then, press Power ON again and remove a DVD from the DVD Unit.

Fig. 2-4

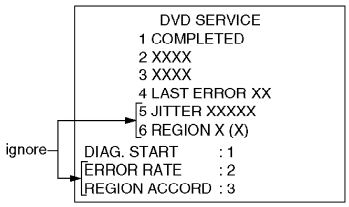

- If some error is detected, 2 digit for Error Code will appear as shown in Fig. 2-5.

Fig. 2-5

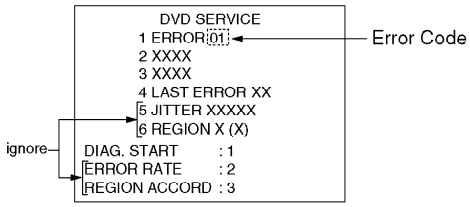

Fig. 2-6

Error Code

Error Code	Explanation of cause
00	No Error
10	Loading Error
30	Ultra DMA (Direct Memory Access) CRC Error
40	Spindle Motor Error
50	Traverse Motor Error
60	Servo Error
70	Recovery Error

5.1.3. HOW TO UPDATE THE FIRMWARE OF DVD

It is possible to update the firmware version of the DVD Drive and the DVD Decoder using each Firmware Disc for DVD Drive and DVD Decoder.

5.1.3.1. How to update the firmware of DVD

1. **Confirm the firmware version of DVD Drive. Refer to "SELF-DIAGNOSTIC TEST FUNCTION FOR DVD."**
2. **Set the unit to DVD mode.**
3. **Press OPEN/CLOSE button to open the tray. Then, place the Firmware Disc for DVD Drive in the tray.**
4. **Close the tray. Updating will begin automatically.**
5. **After approx. 1 minute, the tray will open automatically.**
   Note:
   If the tray has still not opened after 3 minutes or Error Indication appears, updating was unsuccessful. In this case, repeat above steps from step 1.
6. **Remove the Firmware Disc from the tray. Then, disconnect the AC Plug. (The tray will not close.)**
7. **Connect the AC Plug and turn on the power. Then, reset all VCR memory. Refer to "HOW TO RESET ALL COMBINATION DVD VCR MEMORY FUNCTIONS."**

5.1.3.2. How to update the firmware of DVD Decoder:

1. **Confirm the firmware version of DVD Decoder. Refer to "SELF-DIAGNOSTIC TEST FUNCTION FOR DVD."**
2. **Set the unit to DVD mode.**
3. **Press OPEN/CLOSE button to open the tray. Then, place the Firmware Disc for DVD Decoder in the tray.**
4. **Close the tray. Updating will begin automatically.**
5. **After approx. 1 minute, the tray will open automatically.**

Note:

If the tray has still not opened after 3 minutes or Error Indication appears, updating was unsuccessful. In this case, repeat above steps from step 1.

6. **Remove the Firmware Disc from the tray. Then, disconnect the AC Plug. (The tray will not close.)**
7. **Connect the AC Plug and turn on the power. Then, reset all VCR memory. Refer to "HOW TO RESET ALL COMBINATION DVD VCR MEMORY FUNCTIONS."**

CAUTION:

1. **Do not unplug the AC Cord during updating.**
2. **Do not press any buttons during updating.**

5.1.4. USAGE SCREEN MODE

Function displayed on the TV monitor:

- the total elapsed "Power on" time (in days)
- the total elapsed "Cylinder rotation" time (in hours)
- the total elapsed "DVD play" time (in hours).

1. **With power turned and no cassette, press STOP/EJECT button on VCR and 7 key on remote together.**
   The USAGE SCREEN will be displayed on the TV Monitor.

Fig. 3

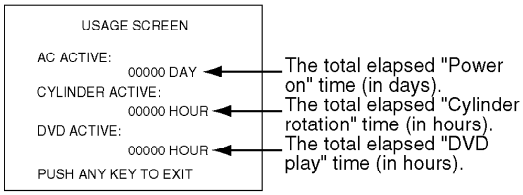

<TV monitor>

Note:

1. **After replacing the Cylinder Unit, press COUNTER RESET button on remote in this mode. Only Total elapsed "Cylinder rotation" time (in days) will be cleared to 0.**
2. **After replacing the DVD Unit, press ADD/DLT button on remote in this mode. Only Total elapsed time "DVD Play" time (in hours) will be cleared to 0.**
3. **To release from Usage Screen Mode, press any operation button**

on VCR or insert a cassette tape in this mode. VCR will return to normal operation mode.

5.1.5. GROUNDING FOR ELECTROSTATIC BREAKDOWN

Prevention

1. **Human body grounding**
   Use the antistatic wrist strap to discharge the static electricity from your body.
2. **Work table grounding**
   Put a conductive material (sheet) or steel sheet on the area where the optical pickup is placed and ground the sheet.

Caution:

The static electricity of your clothes will not be grounded through the wrist strap. So take care not to let your clothes touch the optical pickup.

Fig. 4

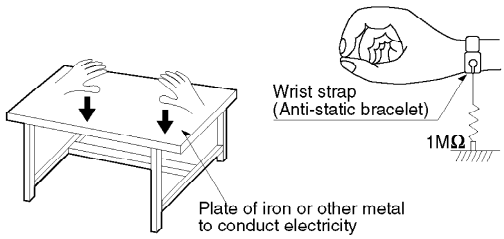

5.1.6. DVD DECODER C.B.A. REPLACEMENT NOTE

After replacing DVD Decoder C.B.A. or EEPROM IC (IC8001), confirm the Firmware version of DVD using Self-Diagnostic function. If the version is different than that indicated on the Firmware Disc, update it using the Firmware Disc. Refer to "HOW TO UPDATE THE FIRMWARE OF DVD."

5.1.7. METHOD FOR EJECTING THE DVD TRAY MANUALLY

1. **Insert a Straightened Paper Clip or similar object into the Eject hole.**
2. **Press it gently, and then pull the Tray fully out.**

Fig. 6

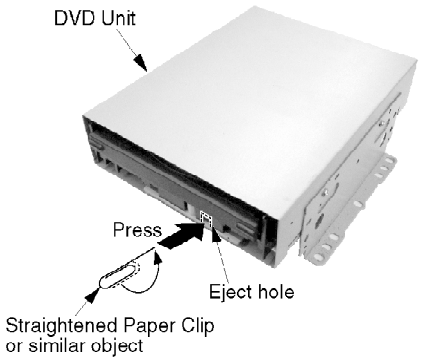

5.1.8. SERVICE POSITION

5.1.8.1. Service Position

Service Position	Purpose
Service Position (1)	Mechanism check Mechanical adjustment Electrical adjustment Power Supply C.B.A. check
Service Position (2)	Main C.B.A. check TV Main C.B.A. check
Service Position (3)	DVD Decoder C.B.A. check

CAUTION:

HOT CIRCUIT (Primary circuit) exists on the Power Supply C.B.A., TV Main C.B.A., and Tuner Main C.B.A.

Use extreme care to prevent accidental shock when servicing.

5.1.8.1.1. Service Position (1)

Fig. 6-1

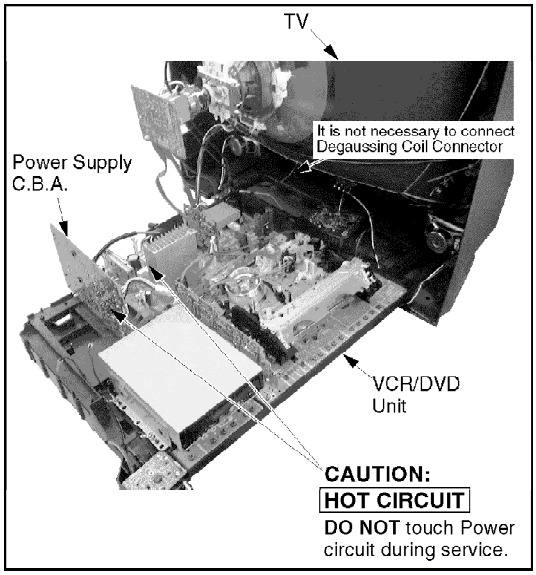

5.1.8.1.2. Service Position (2)

Fig. 6-2-1

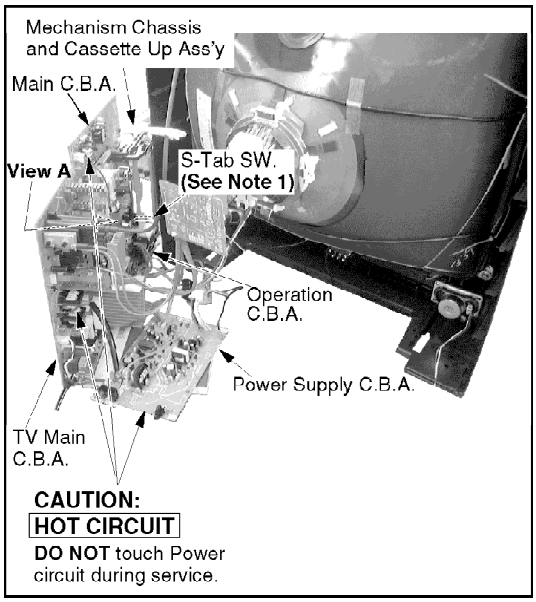

Note:

1. It is possible that the S-Tab SW. may not work correctly in Service Positions(2). (Recording can not be done). In this case, short the S -Tab SW. Pins on the foil side of Main C.B.A. to turn this SW. on.

Fig. 6-2-2

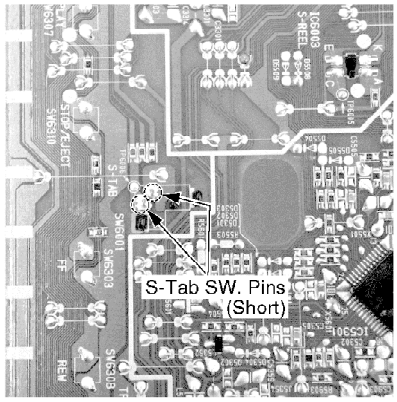

Main C.B.A. (foil side)

View A

Alternative method:
Cover the S-Tab SW. with masking tape.

5.1.8.1.3. Service Position (3)

In Service Position (3), the DVD Decoder C.B.A. with Extension Cable (LSUA0034) X3 and Connector Cable (IDE Cable) (Not supplied) can be peformed.

Fig. 6-3-1

Extension Cable (LSUA0034) 3pcs

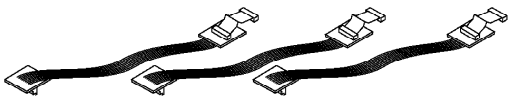

Connector Cable (IDE Cable) Not supplied (Purchase locally)

1. Remove the DVD Unit and the DVD Decoder C.B.A.

   Note:

   Remove the original Connector Cable (IDE) from the DVD Unit. (The original Connector Cable (IDE) is not used in this position.)

2. Conect the Connector Cable (Power) and the Connector Cable (IDE Cable) to the DVD Unit from the DVD Decoder C.B.A.

3. Connect the 3 Extension Cables as follows:

   - With Extension Cable (LSUA0034): P8001 on the DVD Decoder C.B.A. to P1501 on the Power Supply C.B.A.

   - With Extension Cable (LSUA0034): P8002 on the DVD Decoder C.B.A. to P4004 on the Main C.B.A.

   - With Extension Cable (LSUA0034): P8003 on the DVD Decoder C.B.A. to P6002 on the Main C.B.A.

4. Place the DVD Unit and DVD Decoder C.B.A. as shown.

Fig. 6-3-2

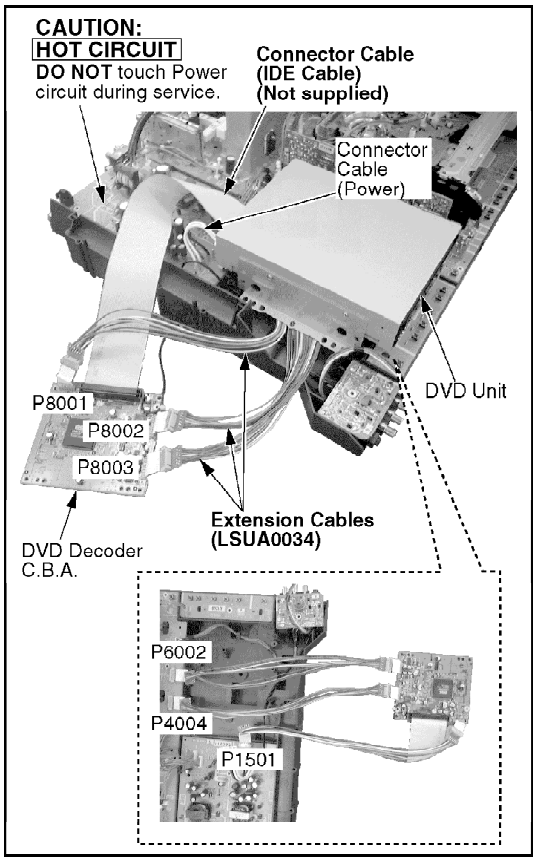

5.1.9. HOT CIRCUIT

Primary circuit exists on the Power Supply C.B.A., the TV Main C.B.A., and the Main C.B.A. This circuit is identified as " HOT " on the C.B.A. and in the Service Manual. Use extreme care to prevent accidental shock when servicing.

5.1.10. SERVICE MODE

In order to inhibit detection of the Supply & Takeup Photo Transistors, Reel Sensor, and Cylinder Lock, press and hold STOP/EJECT, PLAY/REPEAT, and CH down buttons of VCR operation panel on the unit together over 5 secondsin power on condition.

Fig. 7

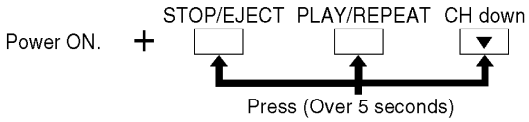

The unit goes into service mode.
In this mode, Mechanism movement can be confirmed. When removing Cassette Up Ass'y, it can be confirmed without a cassette.
To release from this mode, press POWER button off or disconnect AC Plug.

5.1.11. CAUTION FOR INSTALLATION OF VCR/DVD ASS'Y

CAUTION:

Opener Lever may be damaged when VCR/DVD Ass'y is installed, with Cassette Door-Lid and Opener Lever of Cassette Up Ass'y set incorrectly.

Install the VCR/DVD Ass'y as follows:

1. **Swing the Cassette Door-Lid all the way open until the Cassette Door tab clears the Opener Lever.**
2. **Make sure that all guide tabs are aligned properly. Then, press the VCR/DVD Ass'y straight in.**

Fig. 8

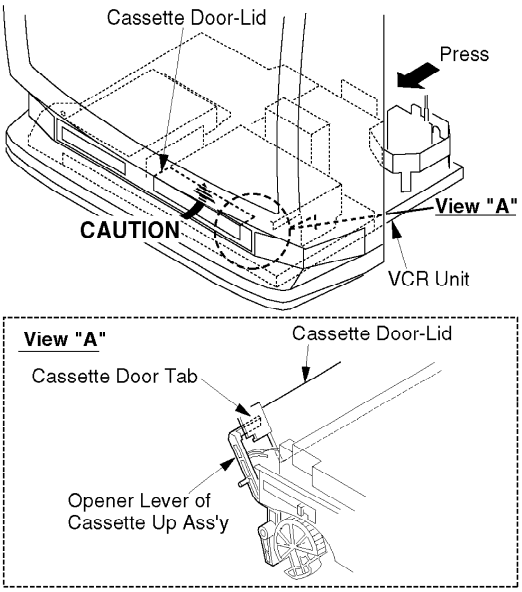

5.1.12. METHOD FOR LOADING/UNLOADING OF MECHANISM

5.1.12.1. (Manual Method)

Turn the Loading Gear clockwise (for loading) or counterclockwise (for unloading) using needlenose pliers etc.

Note:

Do not use this method if Mechanism is jammed or locked.

Fig. 9-1

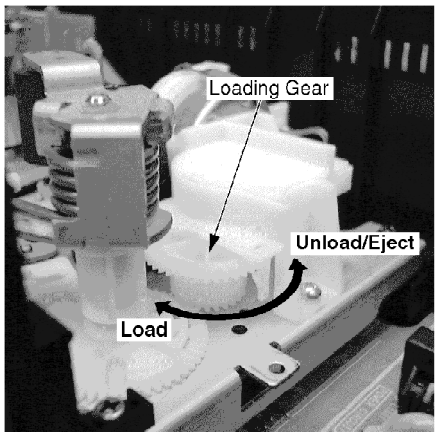

5.1.12.2. (Electrical Method)

Apply +10.0 V DC Power Supply to the Loading Motor terminals.

Loading
DC + to Portion "a," DC - to Portion "b"
Unloading
DC - to Portion "a," DC + to Portion "b"

CAUTION:

Before applying DC Power Supply, be sure to cut the Motor Leads with a cutter, etc.
Otherwise, the Loading Motor Drive IC (IC2501) may be damaged.

Fig. 9-2

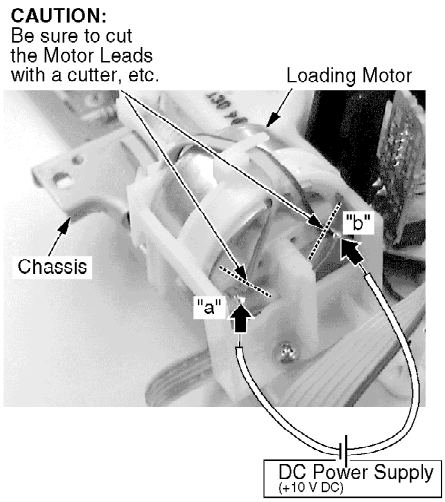

5.1.12.2.1. WHEN LOADING WITHOUT A CASSETTE
When loading without a cassette, push Portion "a" on the Holder Unit of Cassette Up Ass'y so that the Lever clear the First Tab and Second Tab.

Fig. 9-3

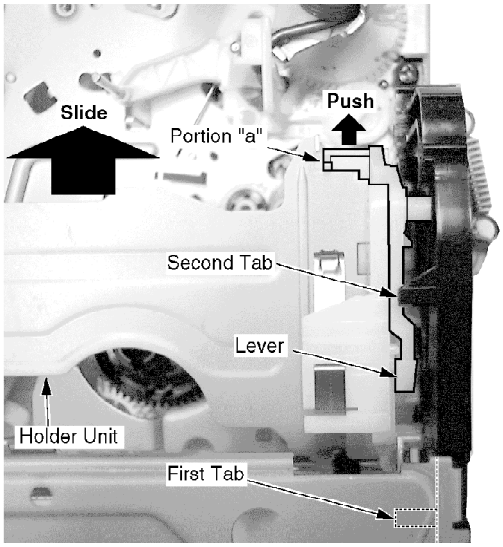

5.1.13. HOW TO REMOVE A JAMMED TAPE

CAUTION:

Wiper Arm Unit may be damaged or its spring may be out of place when the jammed tape is removed by force.

Remove a jammed tape as follows:

5.1.13.1. Manual Method

When a tape jam is encountered, check the tape loading condition and use the following procedure to remove a tape jam.

Fig. 10-1

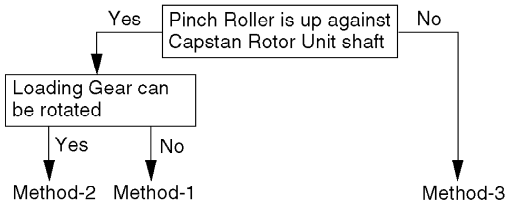

Method -1:

1. **Move the Pinch Roller Unit out by unhooking the Pin of Pinch Arm Unit so that the Pinch Roller is separated from the Capstan Rotor Unit shaft.**

Fig.10-2

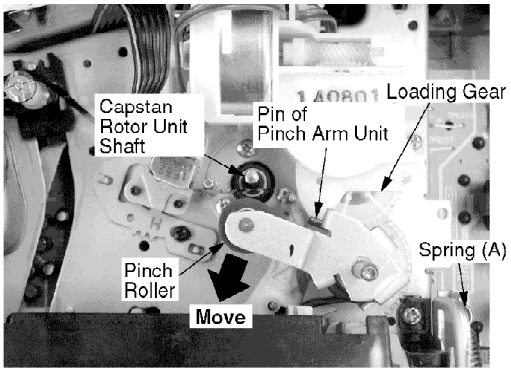

Top View

2. **Remove the tape from the tape path.**
3. **Rewind the tape into the cassette by rotating the Center Clutch Unit counterclockwise.**
4. **Unhook Spring (A) of the Drive Rack Arm.**
5. **Remove Screw (A).**
6. **Lift the Cassette Up Ass'y. While pulling the Cassette Up Ass'y out far enough so that it clears the Drive Rack Arm, slide the Drive Rack Unit as indicated by the arrow to remove the cassette tape from the Cassette Up Ass'y.**
7. **Check the cause of mechanical trouble and repair.**

Fig. 10-3

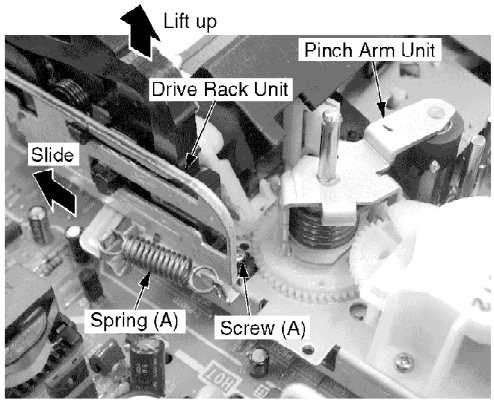

Method -2:

1. Rotate Loading Motor counterclockwise with needlenose pliers, etc. so that the Pinch Roller is separated from the shaft of the Capstan Rotor Unit.
2. Perform Step 2 through Step 7 of Method -1.

Method -3:

1. Perform Step 2 through Step 7 of Method -1.

Note:

After repairing mechanical trouble, make sure that all gear alignments are correct, especially the Wiper Arm Unit and Drive Rack Unit of Cassette Up Ass'y. (Refer to "EJECT Position Confirmation"in Disassembly/Assembly Procedures.)

5.1.13.2. Electrical Method

Electrical method can only be performed when the mechanism is moved by rotating the Loading Gear.

CAUTION:

- **Before applying DC Power Supply, be sure to cut the Motor Leads with a cutter, etc.**
  Otherwise, the Loading Motor Drive IC (IC2501) may be damaged.
- **If loading does not start in approx. 2 seconds after DC Power Supply is applied, DO NOT continue to apply DC Power Supply. Instead, perform "Manual Method."**

1. Be sure to cut the Motor Leads with a cutter, etc.
2. Apply +10.0 V DC Power Supply to the Loading Motor terminals.
3. When the Loading Posts reach the fully unloaded position, remove the Power Supply.

Fig. 11

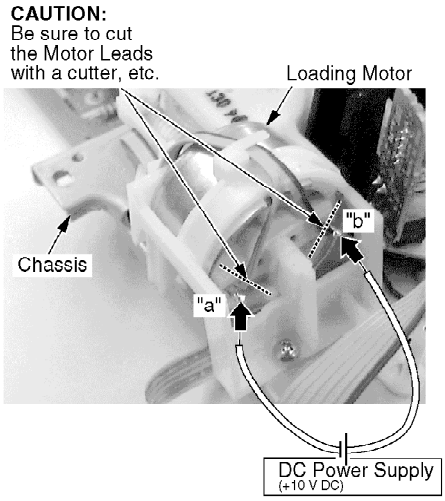

4. **Rewind the tape into the cassette by turning the Center Clutch Unit counterclockwise.**
5. **Eject the cassette by applying +10.0 V DC Power Supply again.**

5.1.14. WIRE AND LEAD POSITION DIAGRAM

Fig.12

After servicing, make sure that all wires, leads, and clampers are placed in their original position. It is important for the best operation of the unit.

Note:
No lead wires or flat cables should touch any heating parts or the Heat Sink Plate.
Use extreme care especially for followings.

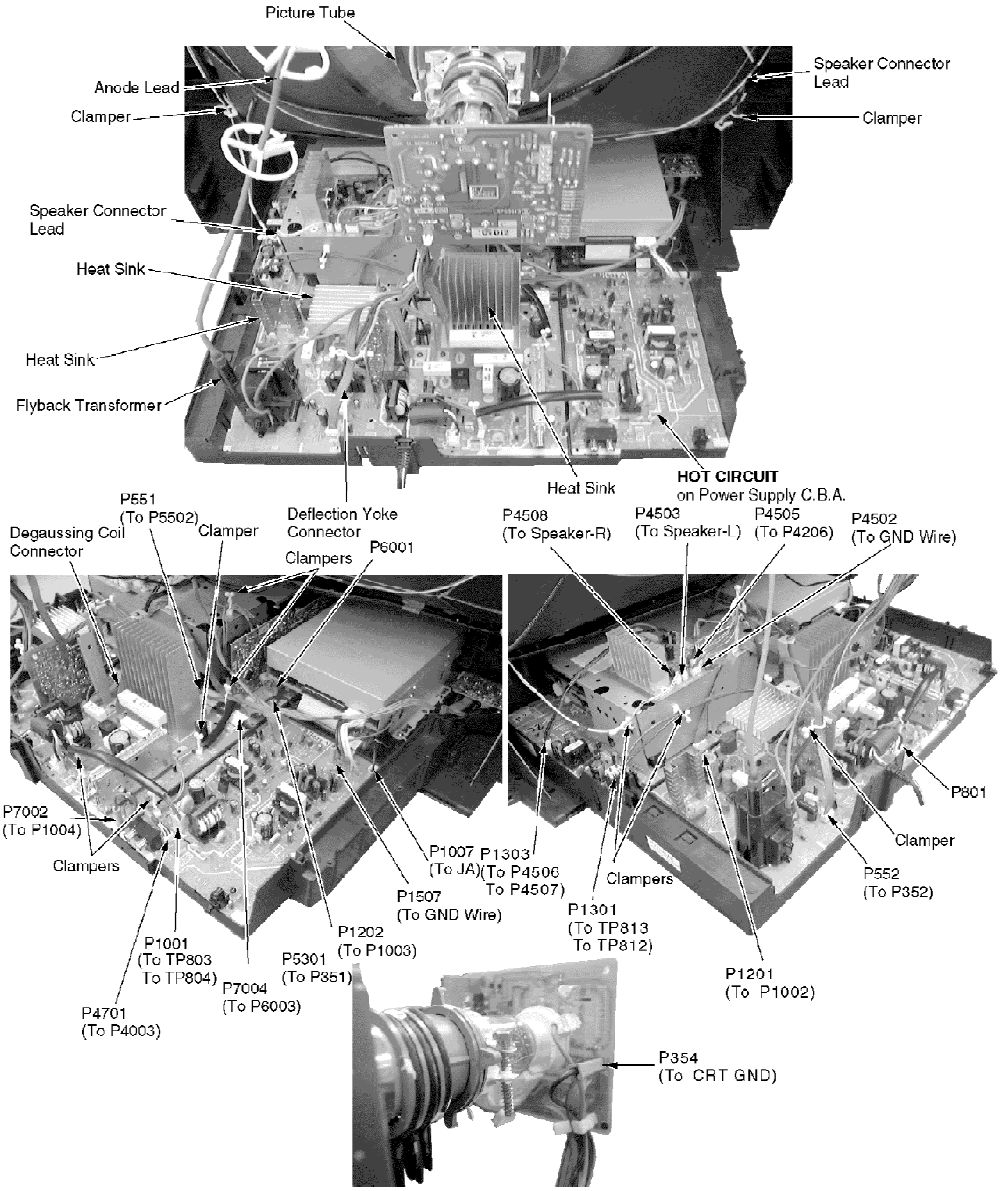

5.1.15. DEFEATING THE AUTO TRACKING

To defeat the Auto Tracking Function, place the instrument in the STOP mode and place a jumper between TP6003 and TP6009 on the Main C.B.A. The tracking will be placed in the neutral position.

5.1.16. HOW TO SET TRACKING TO THE NEUTRAL POSITION

Ejecting the cassette tape and then reinserting it will reset the tracking to the Neutral position.

5.1.17. BLACK SCREWS ON THE CHASSIS

Black Screws are used on the Mechanism Chassis to identify screws that require adjustment.

5.1.18. HOW TO RESET ALL COMBINATION DVD VCR MEMORY FUNCTIONS

To reset (clear) the select language, channel auto set and set clock functions to their initial

power on condition (power on, no cassette inserted), hold down the PLAY/REPEAT and FF buttons of VCR operation panel on the unit together formore than 5 seconds.
Power will shut off.

5.1.19. HOW TO CONFIRM AUTO CLOCK SET FEATURE

1. **Connect an RF cable from the output of one unit to the input of the test unit.**
2. **Select corresponding RF channels.**
3. **Playback a recording of P.B.S. channel including clock set data and confirm this feature.**

5.1.20. VARIABLE VOLTAGE ISOLATION TRANSFORMER

An Isolation Transformer should always be used during the servicing of Combination DVD VCR whose chassis is not isolated from the AC power line. Use a transformer of adequate power rating as this protects the technician from accidents resultingin personal injury from electrical shocks. It will also protect Combination DVD VCR from being damaged by accidental shorting that may occur during servicing.
Also, when troubleshooting the above type of Power Supply Circuit, a variable isolation transformer is required in order to increase the input voltage slowly.

5.1.21. SPECIAL NOTE

All integrated circuits and many other semiconductor devices are electrostatically sensitive and therefore require the special handling techniques described under the "ELECTROSTATICALLY SENSITIVE (ES) DEVICES" section of this service manual.

5.2. MAINTENANCE CHART

The following chart indicates the schedule for the periodic maintenance which will prolong the life of the machine.
Since the parts are keyed to the Inner Parts Location Diagram, when you replace the following parts, refer to the diagram.

	Parts Name	Unit or Part No.	Hour									
			500	1000	1500	2000	2500	3000	3500	4000	4500	5000
1	Cylinder Unit	LSEG0030	●	◎	●	◎	●	◎	●	◎	●	●
2	Audio Control Head Unit	VEHS0587	●	●	●	●	●	●	●	◎	●	●
3	Pinch Arm Unit	LSXL0079	●	●	◎	●	●	◎	●	●	◎	●
4	S Reel Table	LSDR0004	●	●	●	●	●	●	●	◎	●	●
5	T Reel Table	LSDR0005	●	●	●	●	●	●	●	◎	●	●
6	S Reel Shaft	————				○				○		
7	T Reel Shaft	————				○				○		
8	Capstan Motor Ass'y	LSEM0056										◎
9	Capstan Shaft	————	●	●	●	●	●	●	●	●	●	●
10	T Brake Unit	VXLS1130				◎						
11	Motor Block Unit	LSXK0094				△				◎		
12	Tape Transport	————	●	●	●	●	●	●	●	●	●	●
13	Loading Post Base-S Unit	VXDS0213				△				△		
14	Loading Post Base-T Unit	VXDS0214				△				△		
15	Main Cam Gear Kit	VVGS0009				△				△		
16	Capstan Belt	LSDV0009				◎						
17	Tension Arm Unit	VXLS1129				◎						

※ NOTE

Symbol	Maintenance	Requirement	Remark
●	Cleaning	Ethanol or Cleaning Liquid (Purchased Locally)	Wipe dirt from the parts using soft cloth impregnated with Ethanol. Note : When cleaning rubber parts, avoid using excessive alcohol since it may accelerate deterioration of these parts. After cleaning with alcohol, wipe the alcohol away quickly and thoroughly.
◎	Replacement	————	————
○	Lubrication	High Quality Spindle Oil (Purchased Locally)	Supply one or two drops of oil.
△	Greasing	Grease	Wipe away the old grease and apply new grease.

6. DISASSEMBLY/ASSEMBLY PROCEDURES

6.1. CABINET SECTION

6.1.1. Disassembly Flowchart

Perform all disassembly procedures in the order described in the "Disassembly Flowchart" shown below. When reassembling, use the reverse procedure.

CAUTION:

Disconnect AC plug before disassembly.

Fig. D1

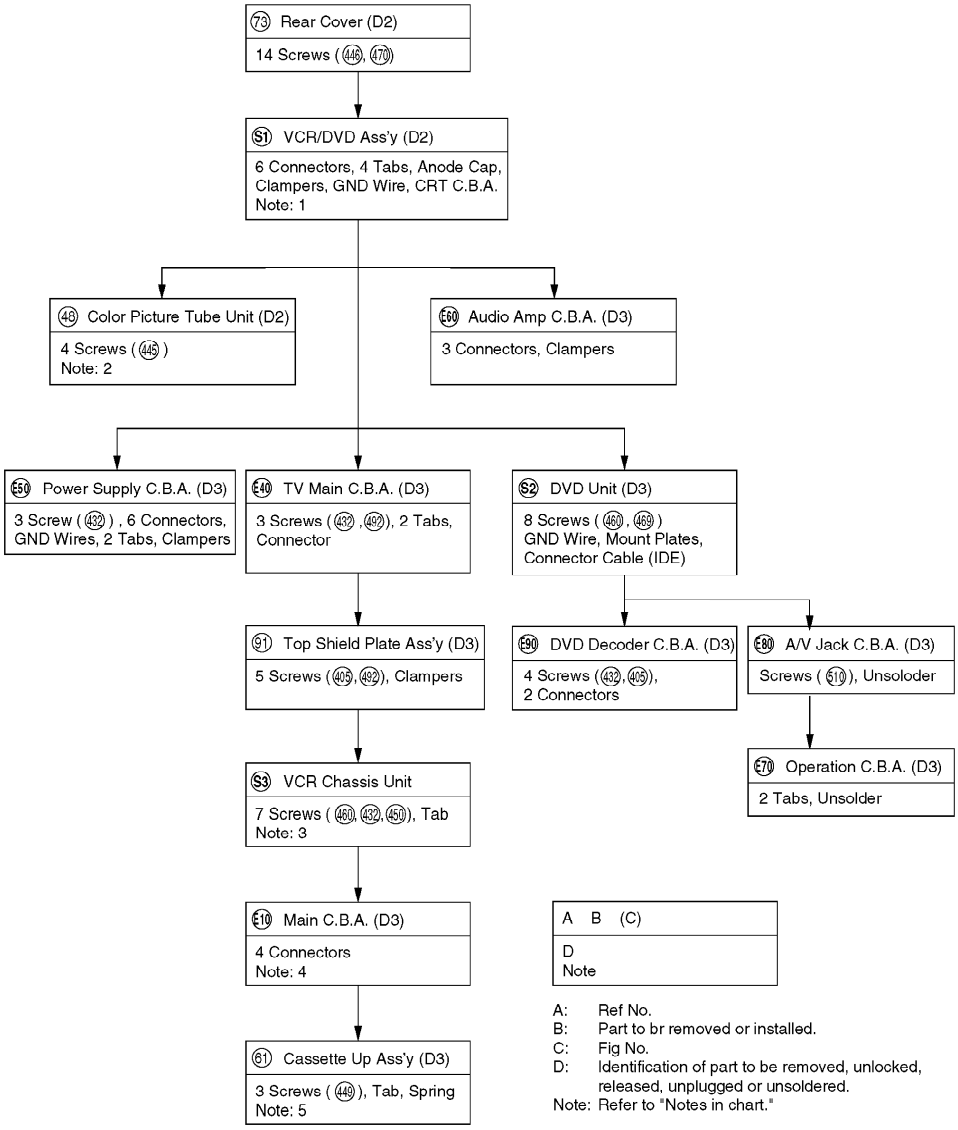
73 Rear Cover (D2)
14 Screws (446, 470)
S1 VCR/DVD Ass'y (D2)
6 Connectors, 4 Tabs, Anode Cap, Clampers, GND Wire, CRT C.B.A.
Note: 1
46 Color Picture Tube Unit (D2)
4 Screws (445)
Note: 2
E60 Audio Amp C.B.A. (D3)
3 Connectors, Clampers
E50 Power Supply C.B.A. (D3)
3 Screw (432) , 6 Connectors, GND Wires, 2 Tabs, Clampers
E40 TV Main C.B.A. (D3)
3 Screws (432, 492), 2 Tabs, Connector
S2 DVD Unit (D3)
8 Screws (460, 469)
GND Wire, Mount Plates, Connector Cable (IDE)
91 Top Shield Plate Ass'y (D3)
5 Screws (409, 492), Clampers
E90 DVD Decoder C.B.A. (D3)
4 Screws (432, 405), 2 Connectors
E80 A/V Jack C.B.A. (D3)
Screws (510), Unsoloder
E70 Operation C.B.A. (D3)
2 Tabs, Unsolder
S3 VCR Chassis Unit
7 Screws (460, 432, 450), Tab
Note: 3
E10 Main C.B.A. (D3)
4 Connectors
Note: 4
61 Cassette Up Ass'y (D3)
3 Screws (449), Tab, Spring
Note: 5
A B (C)
D
Note
A: Ref No.
B: Part to br removed or installed.
C: Fig No.
D: Identification of part to be removed, unlocked, released, unplugged or unsoldered.
Note: Refer to "Notes in chart."

Fig. D2

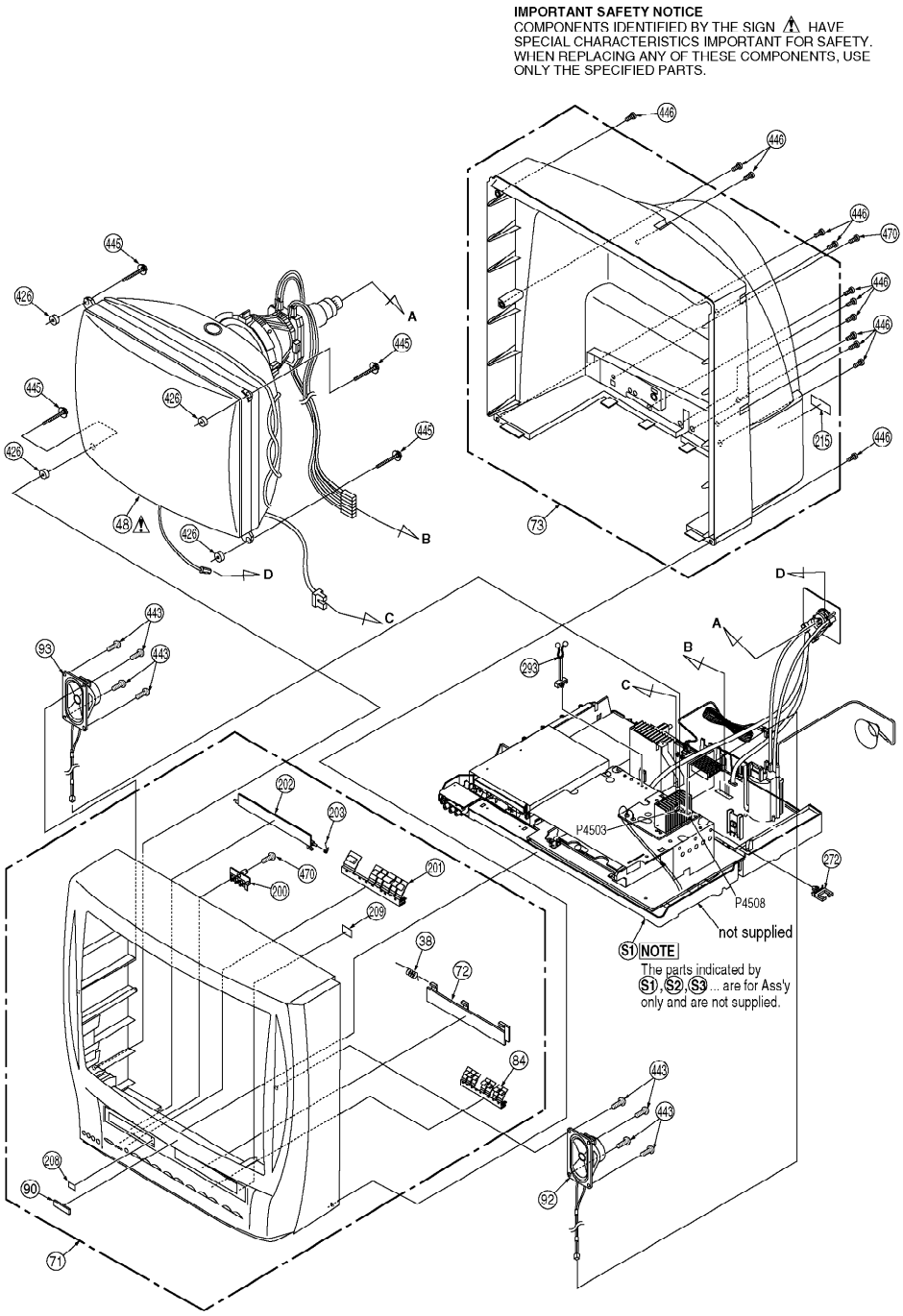
IMPORTANT SAFETY NOTICE
COMPONENTS IDENTIFIED BY THE SIGN ⚠ HAVE SPECIAL CHARACTERISTICS IMPORTANT FOR SAFETY. WHEN REPLACING ANY OF THESE COMPONENTS, USE ONLY THE SPECIFIED PARTS.
P4503
P4508
not supplied
S1 NOTE
The parts indicated by S1, S2, S3... are for Ass'y only and are not supplied.

Fig. D3

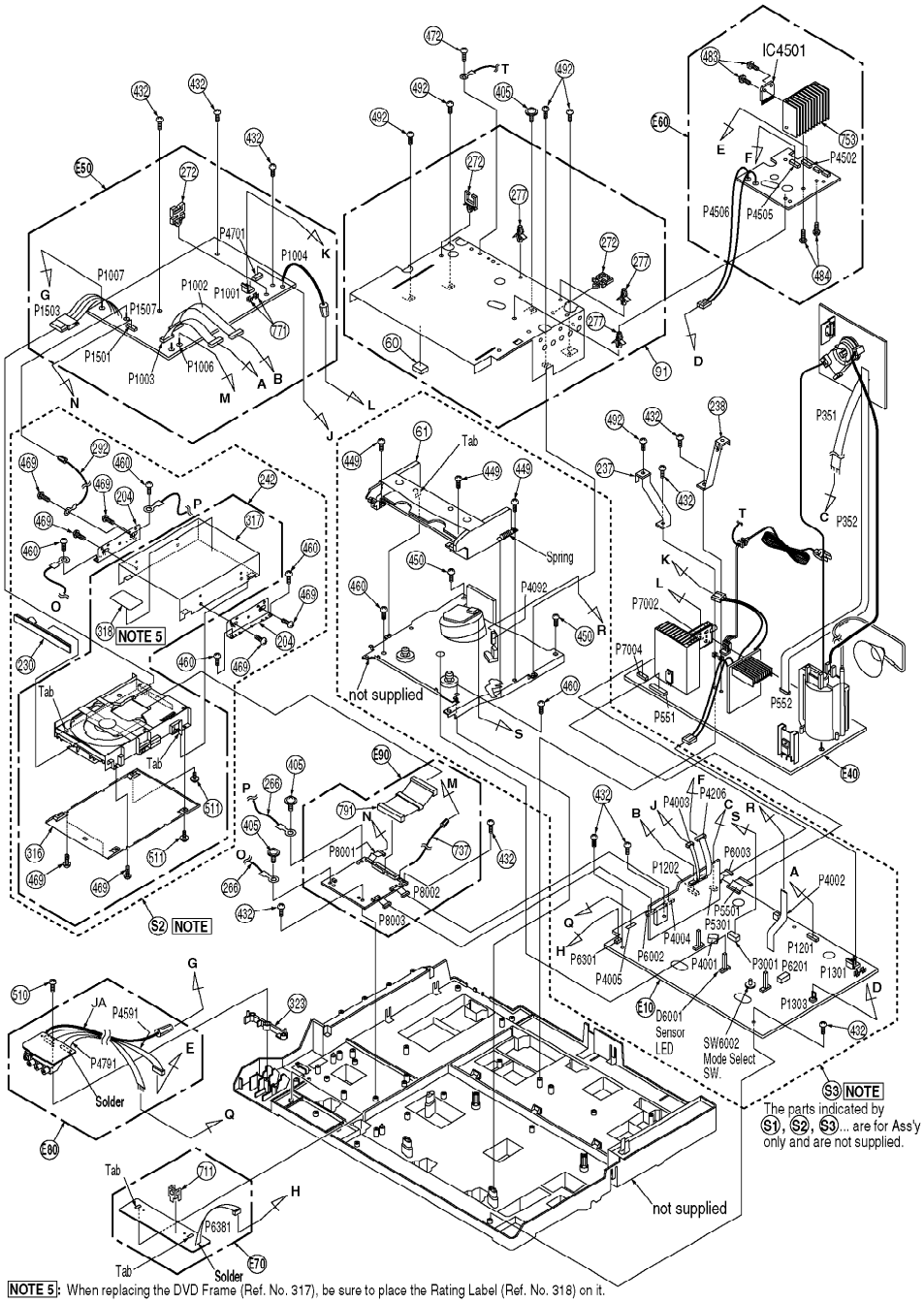

NOTE 5: When replacing the DVD Frame (Ref. No. 317), be sure to place the Rating Label (Ref. No. 318) on it.

6.1.1.1. Notes in chart

1. Removal of VCR/DVD Ass'y

Fig. D4

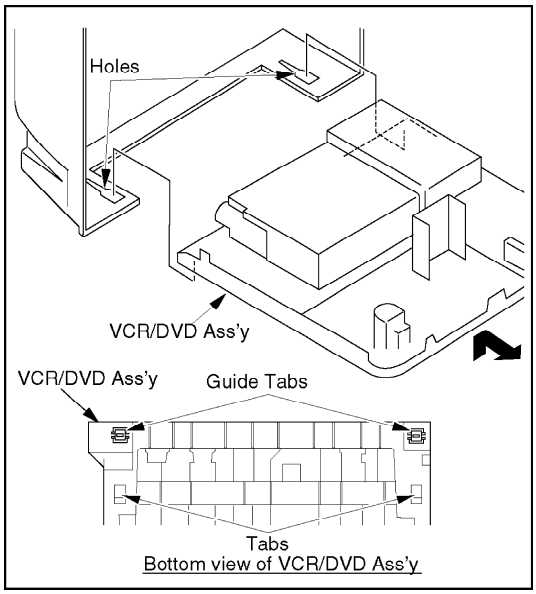

Installation of VCR/DVD Ass'y

CAUTION:

Opener Lever may be damaged when VCR/DVD Ass'y is installed, with Cassette Door-Lid and Opener Lever of Cassette Up Ass'y set incorrectly.

1. **When installing the VCR/DVD Ass'y, swing the Cassette Door-Lid all the way open until the Cassette Door tab clears the Opener Lever.**
2. **Make sure that all guide tabs are aligned properly. Then, press the VCR/DVD Ass'y straight in.**

Fig. D5

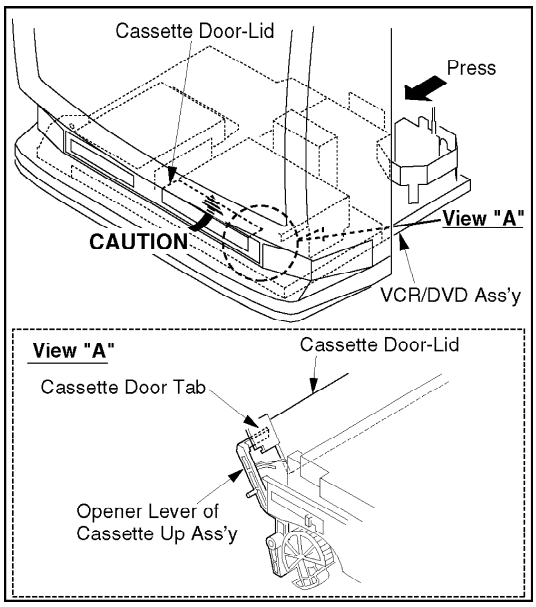

2. Removal of Color Picture Tube Unit

Place the Unit face down on a soft cloth before removing the Color Picture Tube Unit.

3. Installation of VCR Chassis Unit

When installing 2 Screws (460), slide the Holder Unit of the Cassette Up Ass'y (Refer to "WHEN LOADING WITHOUT A CASSETTE" in SERVICE NOTES) to tighten screws. Then, slide it back to the EJECT Position.

Make sure that Mechanism and Cassette Up Ass'y are in the EJECT Position. (Refer to "EJECT Position Confirmation" in Disassembly/Assembly Procedures.)

4. Removal of Main C. B. A.

Work carefully so as not to break Sensor LED when lifting the Mechanism Chassis and Cassette Up Ass'y.

Installation of Mechanism Chassis and Cassette Up Ass'y onto Main C.B.A.

A. Make sure the Mode Select SW. on the Main C.B.A. is in EJECT position. If not, rotate the Mode Select SW. until the alignment projection is in the EJECT Position.

B. Make sure the Mechanism and Cassette Up Ass'y are in the EJECT Position. (Refer to "EJECT Position Confirmation" in DISASSEMBLY/ASSEMBLY PROCEDURES.)

Fig. D6

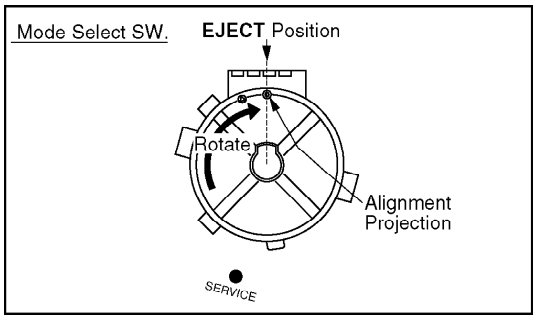

C. Install the Mechanism Chassis and Cassette Up Ass'y straight onto the Main C.B.A. so that the Sensor LED clears the hole in the Mechanism Chassis and that 3 Connectors (P6201, P3001 and P4001) are aligned and seated securely.

5. Installation of Cassette Up Ass'y

A. Confirm that the Locking Tab under the Cassette Up Ass'y is in

Hole on the Mechanism Chassis when installing the Cassette Up Ass'y. Then, slide the Cassette Up Ass'y towards the back.

B. When installing 2 Screws (449), slide the Holder Unit (Refer to "WHEN LOADING WITHOUT A CASSETTE" in SERVICE NOTES) to tighten screws. Then, slide it back to the EJECT Position.

C. Hook Spring to the Drive Rack Arm on the Mechanism Chassis.

6.2. MECHANISM SECTION

6.2.1. Disassembly/Reassembly Method

This procedure starts with the condition that the cabinet parts and TV/VCR Main C.B.A. have been removed.
When reassembling, perform the step(s) in the reverse order.
Perform all disassembly/reassembly and alignments procedures in EJECT Position.

Step/Loc. No.	Prior Step(s)	Part	Fig. No.	Remove	Alignment/Adjustment
①	----------	Not used	-	-	
②	----------	Full Erase Head	J2	(L-1)	
③	1	Cylinder Unit	J2	2(S-2), 3(S-3), Flexible Cable, Head Amp C.B.A., Unsolder	TAPE INTERCHANGEABILITY Adjustment
④	----------	Capstan Belt	J3-1	-	
⑤	----------	Support Angle	J3-1	(S-4), (S-5)	
⑥	5	Intermediate Gear B	J3-1	(L-2)	Gear Alignment
⑦	4,5,6	Main Cam Gear	J3-1	Main Cam Push Nut	Gear Alignment
⑧	4	Center Clutch Unit	J4-1	(W-1)	
⑨	4,8	Changing Gear Spring	J4-1	-	
⑩	4,8,9	Changing Gear	J4-1	-	
⑪	4,8,9,10	Idler Arm Unit	J4-1	-	
⑫	----------	Reel Gear	J5-1	2(L-3)	
⑬	4,5,6,7,8,9,10	Main Rod	J5-1	(W-2), (L-4)	Gear Alignment
⑭	----------	Not used	-	-	
⑮	4	Capstan Motor Unit	J6	3(S-6)	
⑯	----------	Not used	-	-	
⑰	----------	Not used	-	-	
⑱	----------	Not used	-	-	
⑲	4,8,9,10,13	T Loading Arm Unit	J7-1	-	Gear Alignment
⑳	4,5,6,7,8,9,10,13,19	S Loading Arm Unit	J7-1	-	Gear Alignment
㉑	----------	T Brake Unit	J8-1	-	
㉒	----------	Tension Control Arm Unit	J8-1	3(L-5)	
㉓	21	T Reel Table	J8-1	-	
㉔	22	S Reel Table	J8-1	-	
㉕	22	Tension Arm Unit	J8-1	2(L-6), (P-1), (P-2)	
㉖	22,25	Loading Post Base-T Unit	J9	-	P2 AND P3 POST HEIGHT, TAPE INTERCHANGEABILITY Adjustment
㉗	22,25	Loading Post Base-S Unit	J9	-	
㉘	----------	Opener Piece	J10-1	2(L-7)	
㉙	4,5,6,7	Drive Rack Arm	J10-1	-	
㉚	28	Pinch Arm Unit	J10-1	-	
㉛	28,30	P5 Arm Unit	J10-1	-	
㉜	5,6,28	Intermediate Gear A	J10-1	-	Gear Alignment
㉝	----------	Motor Block Unit	J11	2(S-9)	
㉞	----------	Audio Control Head Unit	J11	(S-10)	TAPE INTERCHANGEABILITY Adjustment
㉟	5,6,28,30,32,33	Lift Gear	J11	-	
㊱	----------	Not used	-	-	
㊲	22,25	Tension Arm Boss	J11	(L-8)	
㊳	----------	SS Brake Arm Unit	J5-1	(L-9), (P-3)	

6.2.2. Inner Parts Location

Note: BOX indicates alignment (Gear Alignment or Mechanical Adjustment) required when a part is replaced.

Fig. J1-1

TOP VIEW

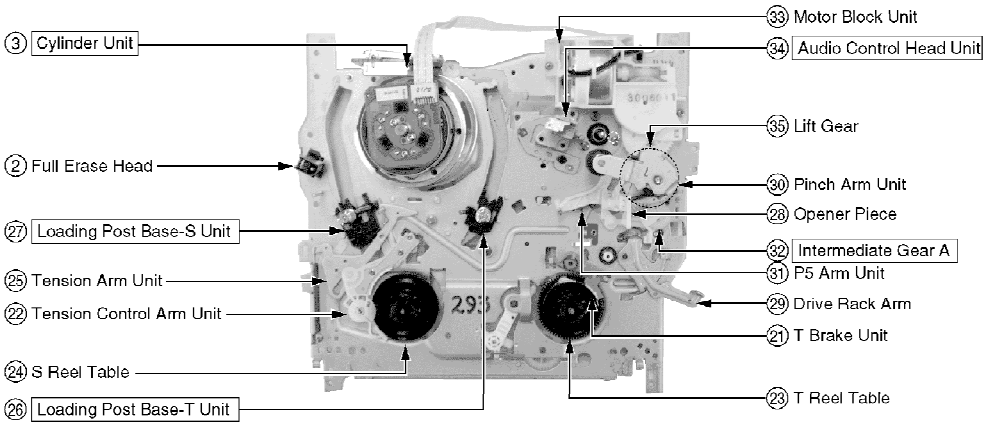

BOTTOM VIEW

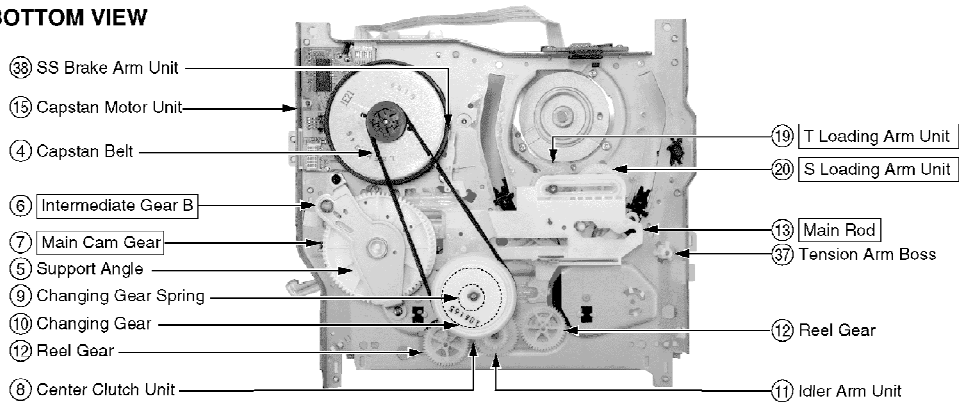

6.2.3. EJECT Position Confirmation

Fig. J1-2

Check the following alignment points to confirm that the Mechanism and Cassette Up Ass'y are in the **EJECT** Position from the top side.

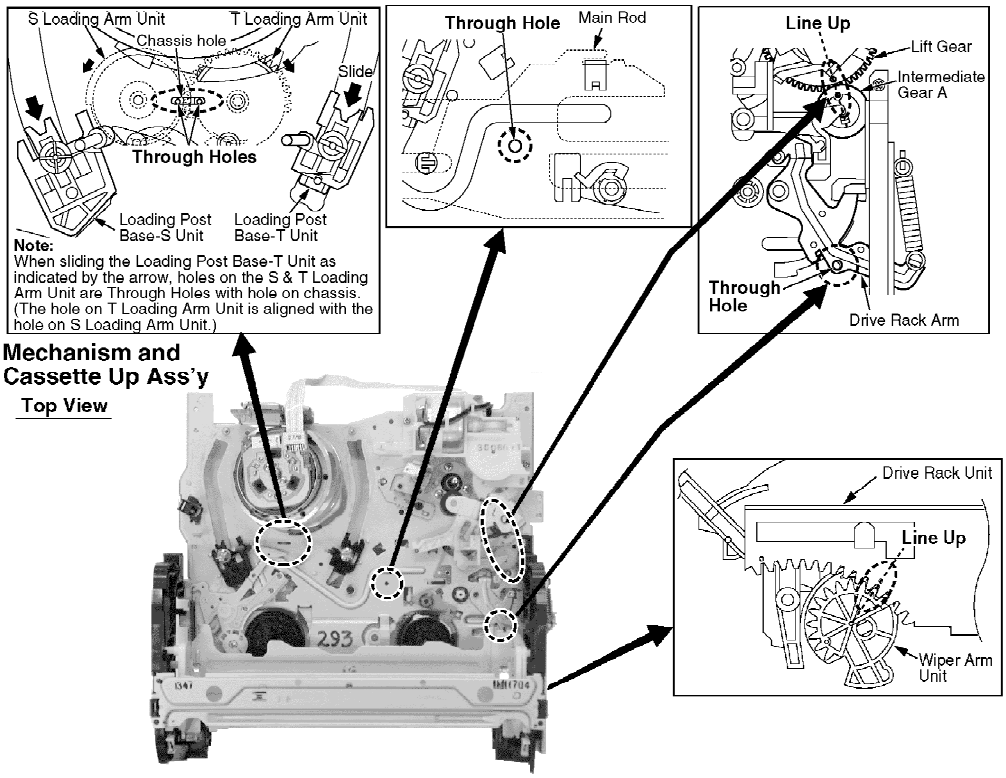

6.2.4. Full Erase Head and Cylinder Unit

Fig. J2

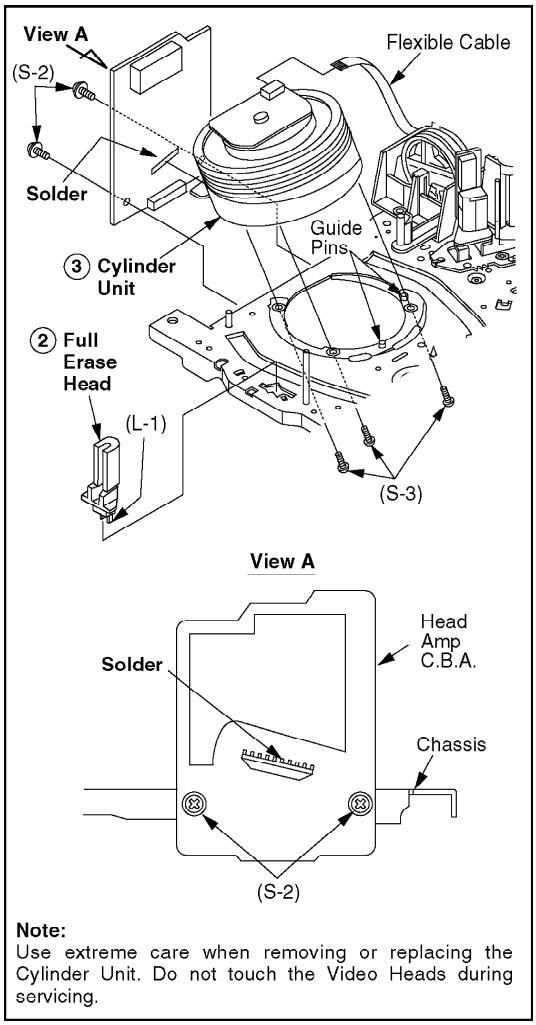

Note:
Use extreme care when removing or replacing the Cylinder Unit. Do not touch the Video Heads during servicing.

6.2.4.1. Reassembly Notes

1. After replacing the Cylinder Unit, clear the Total elapsed "Cylinder rotation" time (in hours) to 0. Refer to "USAGE SCREEN MODE" in SERVICE NOTES.

6.2.5. Capstan Belt, Support Angle, Intermediate Gear B, and Main Cam Gear

Fig. J3-1

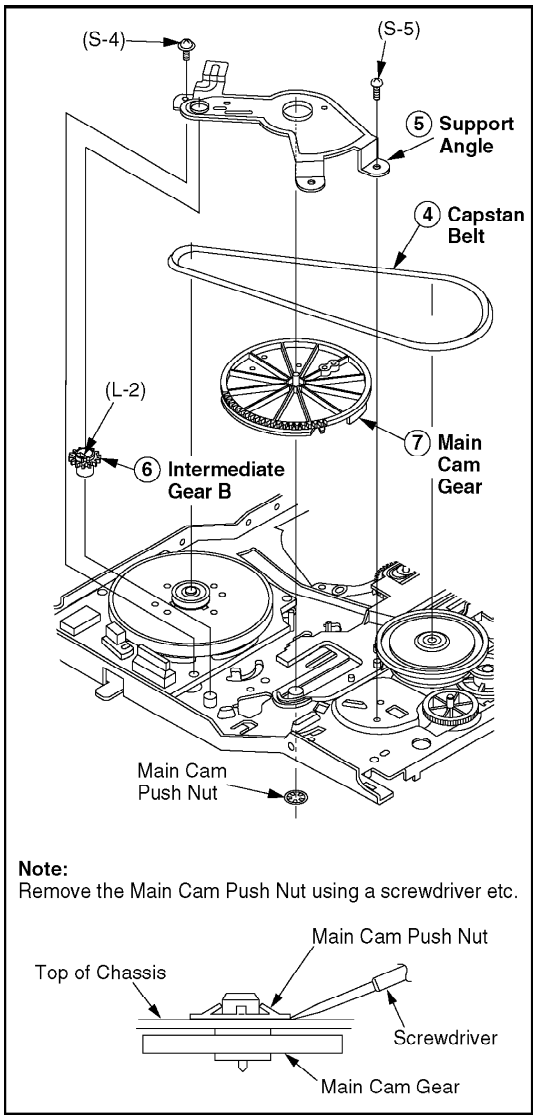

6.2.5.1. Reassembly Notes

1. Alignment of Main Cam Gear, Drive Rack Arm, and Main Rod

A. Confirm that the hole on Main Rod is a Through Hole with a hole on chassis.

B. Confirm that the hole on Drive Rack Arm is a Through Hole with a hole on chassis.

C. Install the Main Cam Gear so that the projection of Main Cam Gear is in the upward position as shown.

Fig. J3-2

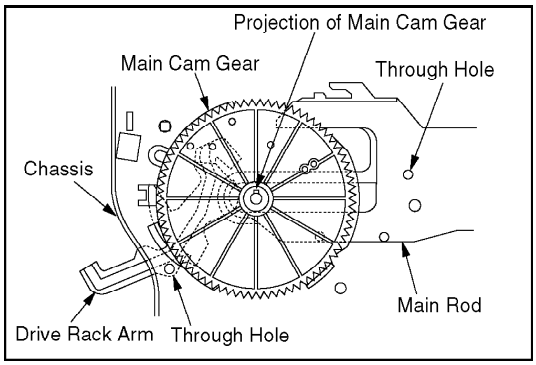

2. Confirmation/Alignment of Intermediate Gear B, Main Cam Gear, and Intermediate Gear A

A. Confirm that the Hole A on Lift Gear is a Through Hole with a hole on chassis.

B. Confirm that the hole on Intermediate Gear A is aligned with the hole on Lift Gear.

Fig. J3-3

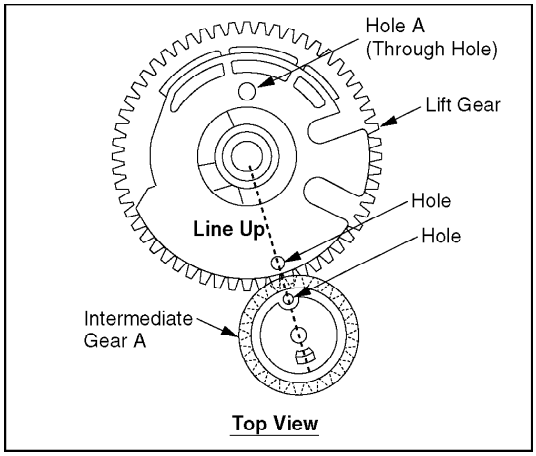

C. Install the Intermediate Gear B so that the hole on the Intermediate Gear B is aligned with the hole on the Main Cam Gear.

Fig. J3-4

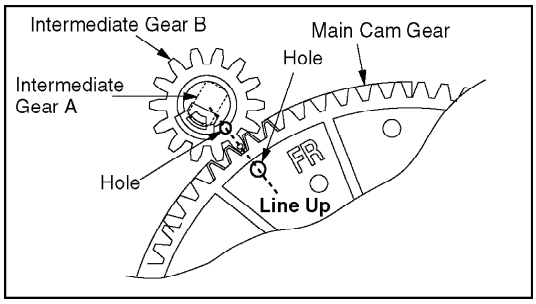

3. Holes on Main Cam Gear

A. The EJECT mode Hole on Main Cam Gear should be a Through

Hole with Hole A on Support Angle in EJECT mode. The each mode Hole on Main Cam Gear should be a Through Hole with Hole B on Support Angle in each mode.

Fig. J3-5

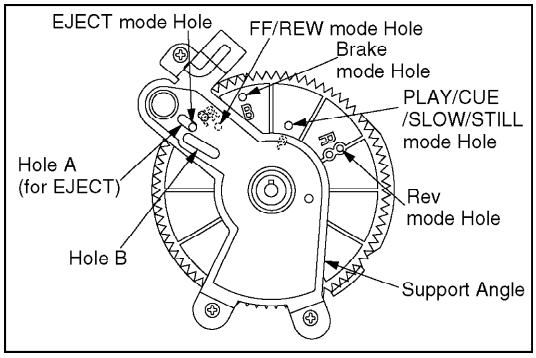

4. Main Cam Gear Kit

A. Main Cam Gear is supplied as a Main Cam Gear Kit only (Kit No. VVGS0009).

Main Cam Gear Kit consists of a Main Cam Gear and a Main Cam Push Nut.

However, Main Cam Push Nut is available separately as a replacement part.

5. Installation of Main Cam Gear and Main Cam Push Nut

A. After installing the Support Angle, install the Main Cam Push Nut with Needlenose Pliers etc. so that it is flush with the chassis.

There may be some slight scratches on the Shaft of Main Cam Gear, when removing the Main Cam Gear. In case that the Main Cam Gear can be installed securely without tottering, it is fine to use the one. If any tottering, install all new parts.

Fig. J3-6

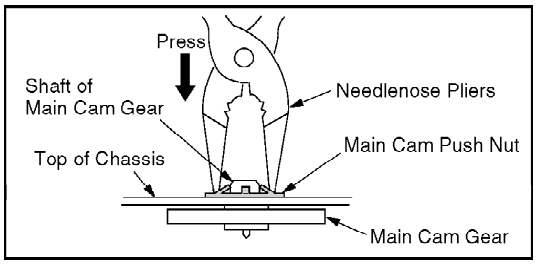

6. The Main Cam Push Nut is not reusable. Install a new one.

6.2.6. Center Clutch Unit, Changing Gear Spring, Changing Gear, and Idler Arm Unit

Fig. J4-1

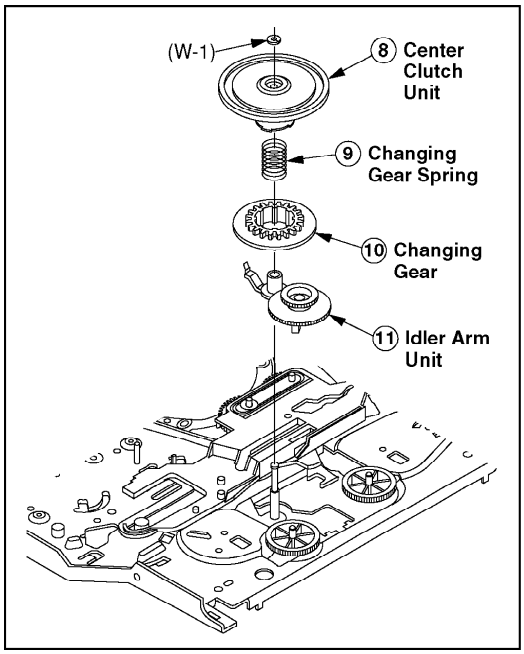

6.2.6.1. Reassembly Notes

1. Installation of Center Clutch Unit

A. Fit the Center Clutch Unit into the Changing Gear.

Fig. J4-2

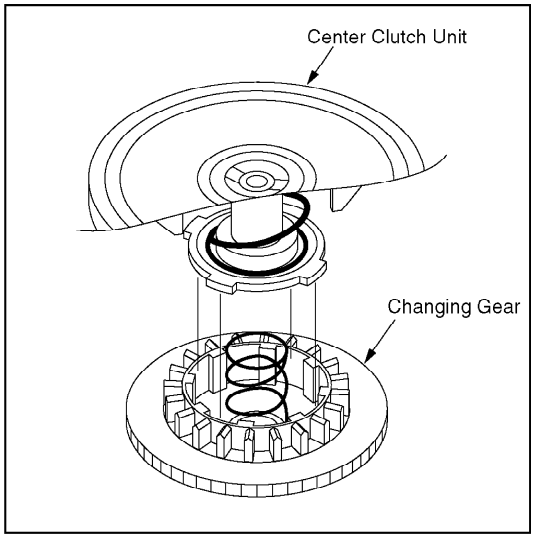

6.2.7. Reel Gear, Main Rod, and SS Brake Arm Unit

Fig. J5-1

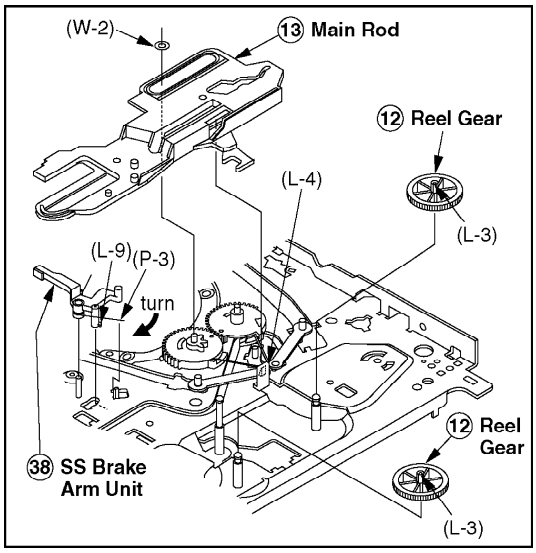

6.2.7.1. Reassembly Notes

1. Alignment of Main Rod and T Loading Arm Unit

A. Align the Gear of T Loading Arm Unit with Gear of Main Rod. Confirm that the Hole on Main Rod is a Through Hole with a hole on chassis.

Fig. J5-2

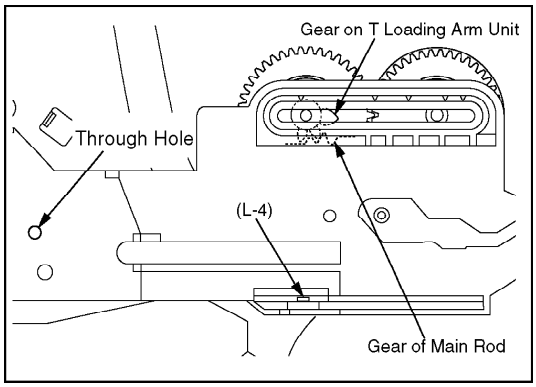

6.2.8. Capstan Motor Unit

Fig. J6

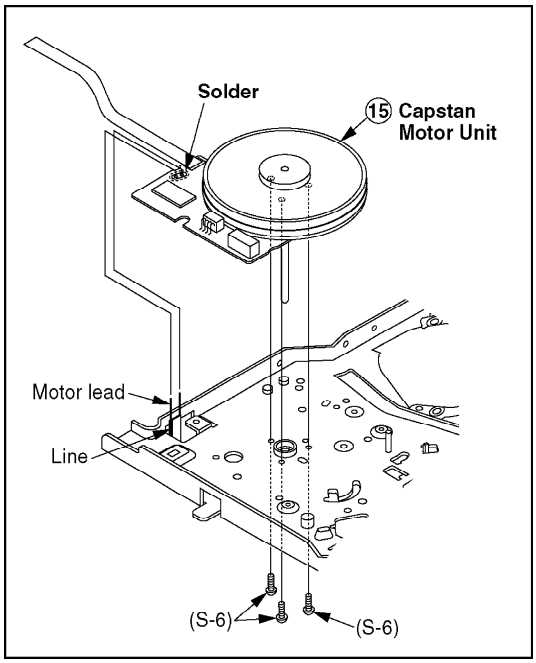

6.2.9. T Loading Arm Unit and S Loading Arm Unit

Fig. J7-1

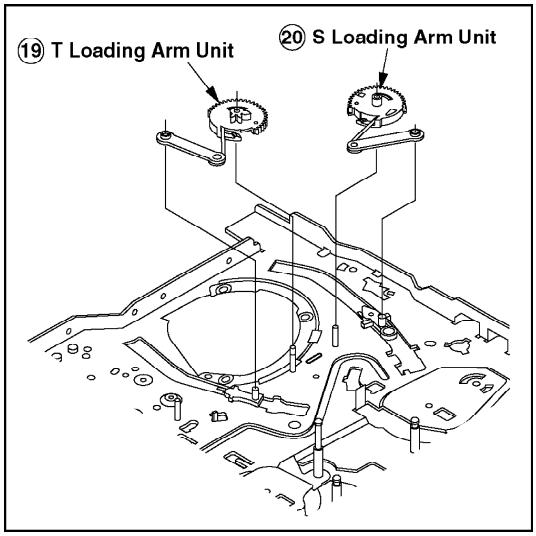

6.2.9.1. Reassembly Notes

1. Alignment of T Loading Arm Unit and S Loading Arm Unit

A. Install the S Loading Arm Unit onto the chassis.

B. Install the T Loading Arm Unit so that the hole on T Loading Arm Unit is aligned with the hole on S Loading Arm Unit.

C. Confirm that the holes on the S & T Loading Arm Unit are Through Holes with hole on chassis.

Fig. J7-2

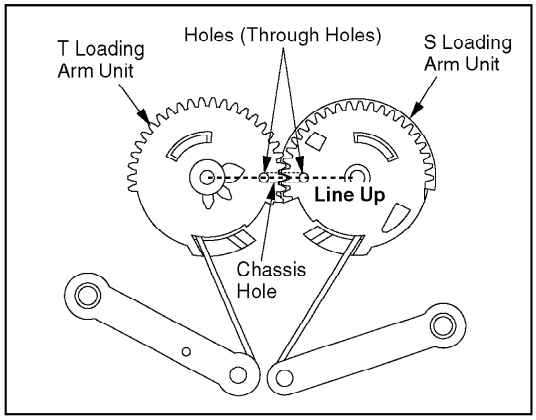

6.2.10. T Brake Unit, Tension Control Arm Unit, T Reel Table, S Reel Table, and Tension Arm Unit

Fig. J8-1

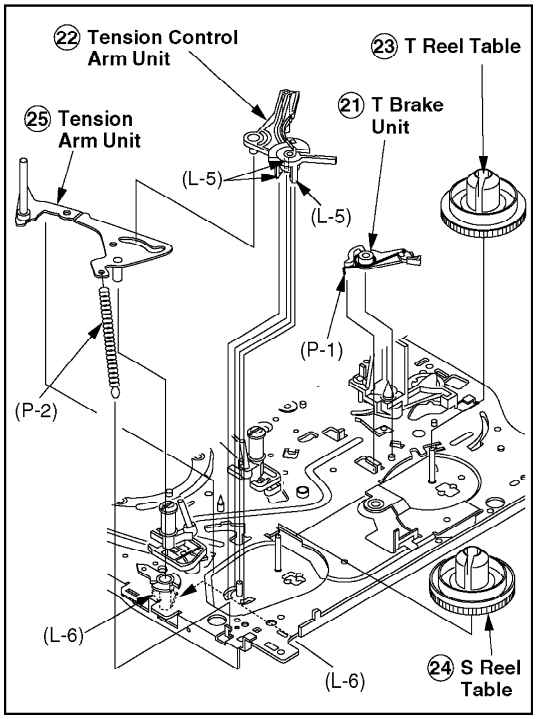

6.2.10.1. Reassembly Notes

1. How to distinguish between S Reel Table and T Reel Table

Fig. J8-2

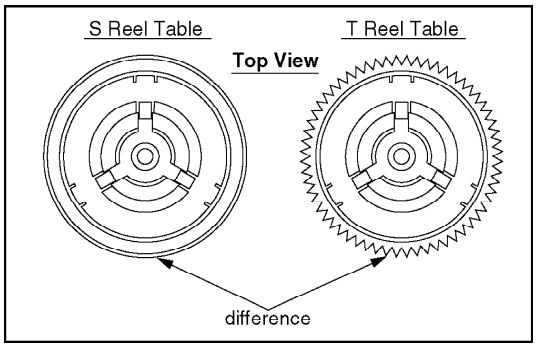

6.2.11. Loading Post Base -T Unit and Loading Post Base -S Unit

Fig. J9

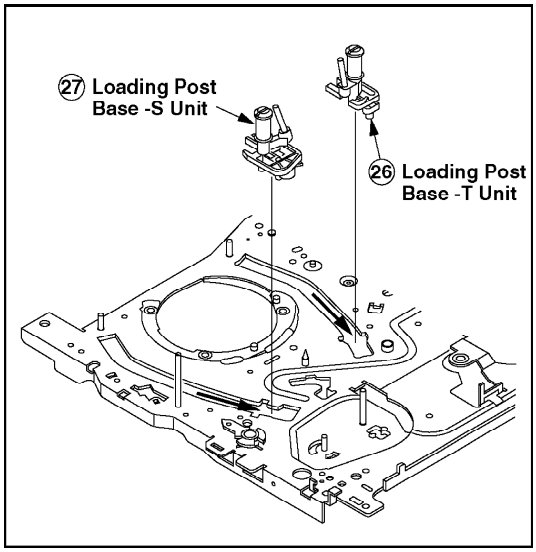

6.2.12. Opener Piece, Drive Rack Arm, Pinch Arm Unit, P5 Arm Unit, and Intermediate Gear A

Fig. J10-1

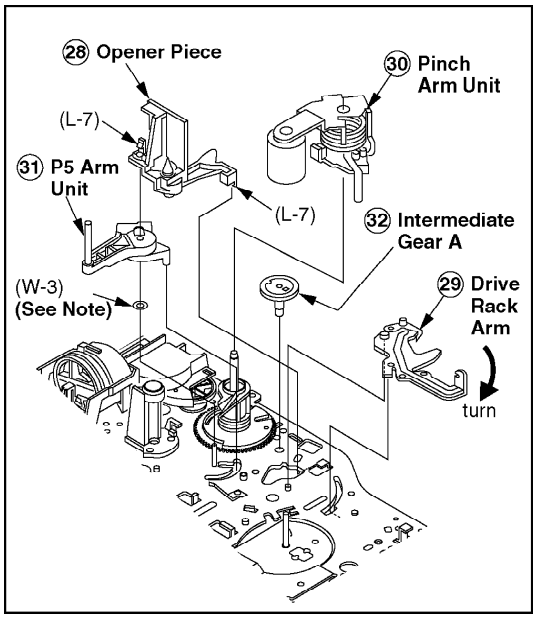

Note:

In early units, a washer is used. When servicing the washer or the P5 Arm Unit, replace only the P5 Arm Unit with a new one, and remove the washer.

6.2.12.1. Reassembly Notes

1. Installation/Alignment of Intermediate Gear A, Lift Gear and P5 Arm Unit

A. Rotate the Lift Gear so that Hole A on Lift Gear is a Through Hole with a hole on chassis.

B. Install the Intermediate Gear A so that the hole on Intermediate Gear A is aligned with the hole on Lift Gear.

C. Install the P5 Arm Unit so that it contacts with the tab of chassis.

Fig. J10-2

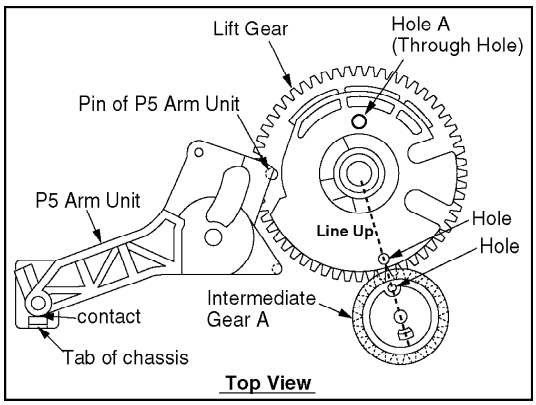

2. Installation of Opener Piece

A. Install the Opener Piece so that the slot of the Opener Piece is inserted to the Pin of Pinch Arm Unit

Fig. J10-3

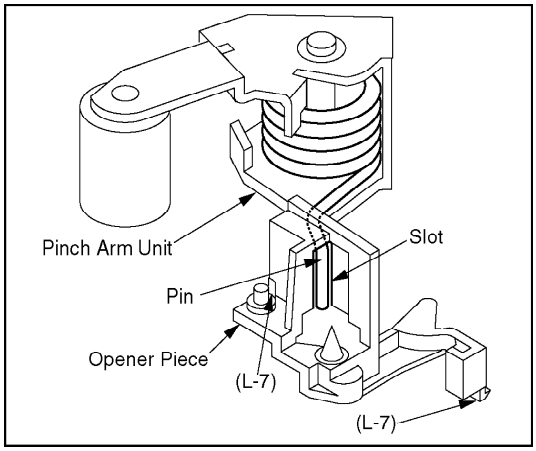

6.2.13. Motor Block Unit, Audio Control Head Unit, Lift Gear and Tension Arm Boss

Fig. J11

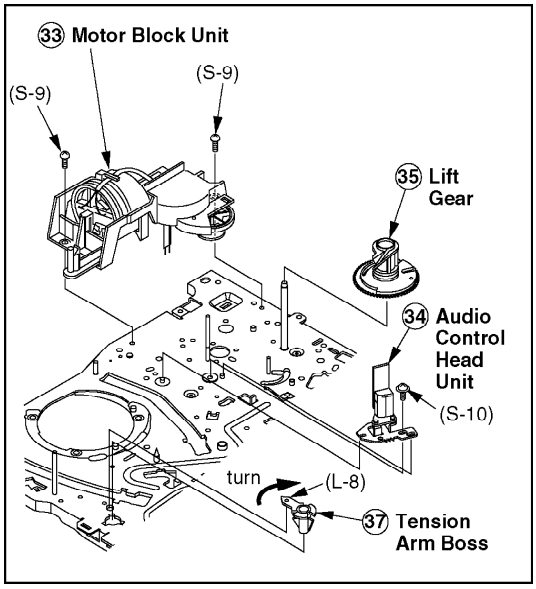

6.3. CASSETTE UP ASSEMBLY SECTION

This chart indicates Step/Location No. of Parts to be serviced and prior steps to gain access items to be serviced when disassembling. When reassembling, perform the step(s) in the reverse order.

Step/Loc. No.	Prior Step(s)	Part	Fig. No.	Remove	Alignment/Adjustment
①	----------	Top Plate	K1-1	(L-1), (L-2)	
②	1	Wiper Arm Unit	K1-1	2(L-3)	Gear Alignment
③	1,2	Holder Unit	K1-1	-	
④	----------	Opener Lever	K2	2(L-4)	
⑤	1,2,3,4	Drive Rack Unit	K2	-	

6.3.1. Top Plate, Wiper Arm Unit, and Holder Unit

Fig. K1-1

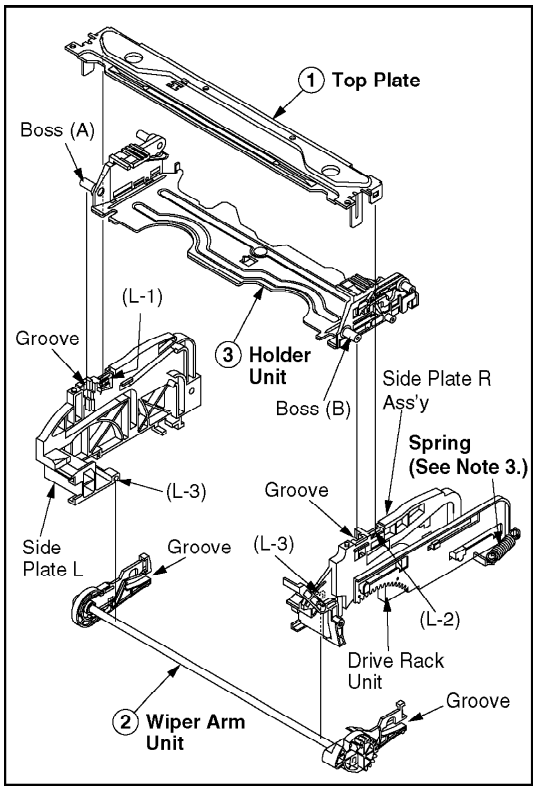

6.3.1.1. Reassembly Notes

1. Alignment of Wiper Arm Unit and Drive Rack Unit

A. Slide the Drive Rack Unit to the far right as indicated by the arrow.

B. Install the Wiper Arm Unit so that the hole on the Wiper Arm Unit is aligned with the hole on the Drive Rack Unit.

Fig. K1-2

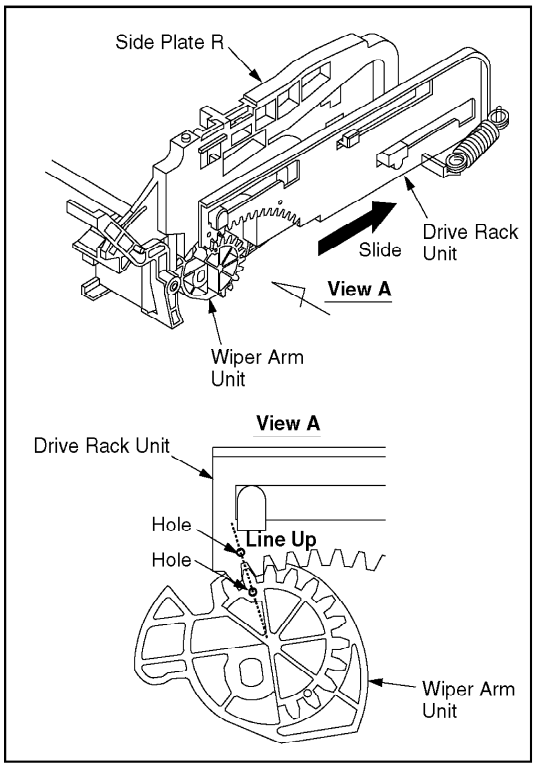

2. Installation of Holder Unit

A. Turn the Wiper Arm Unit so that the grooves on each end are aligned with the each groove on Side Plate L and R.

B. Insert Holder Unit boss (A) and (B) into the grooves as shown in Fig. K1-1.

C. Finally, in the EJECT Position, confirm that the protrudence on the Wiper Arm Unit is aligned with the indentation on the Drive Rack Unit.

Fig. K1-3

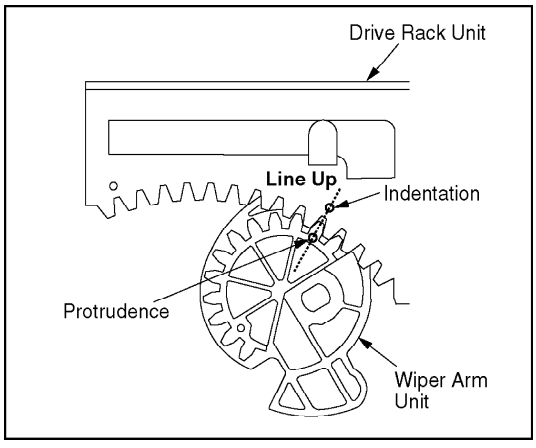

3. Make sure to hook the spring to the Drive Rack Arm of Mechanism chassis.

6.3.2. Opener Lever and Drive Rack Unit

Fig. K2

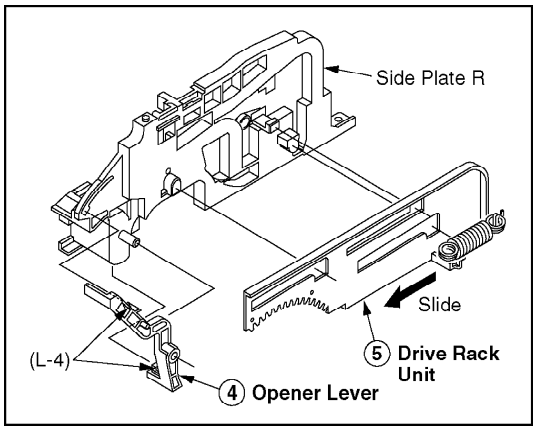

7. ADJUSTMENT PROCEDURES

7.1. SERVICE FIXTURES AND TOOLS

VFMS0003H6 VHS Alignment Tape Video: Color Bar & Monoscope Audio: 6kHz(MONO)	Back Tension Meter (Made in USA., Purchase Locally) 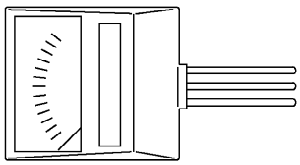	VFK27 Head Cleaning Stick 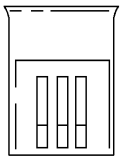
VFK0330 H-Position Adjustment Driver 	VFKS0081 Grease 	VFK0329 Post Adjustment Driver
LSUA0034 Extension Cable (3pcs) 	DVDT-S01 DVD Test Disc 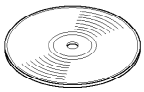	Firmware Disc for DVD Drive Firmware Disc for DVD Decoder 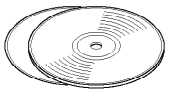 Not supplied
Connector Cable (IDE Cable) Not supplied (Purchase locally)		

7.2. MECHANICAL ADJUSTMENT

7.2.1. CLEANING PROCEDURE FOR THE UPPER CYLINDER UNIT

1. While slowly turning the Upper Cylinder Unit counterclockwise by hand, gently rub the Video Heads with a Head Cleaning Stick (VFK27) moistened with Ethanol.
   When using a Cleaning Cassette, make sure to use "DRY" type only and be aware that excessive use can shorten head life.

Fig. M1

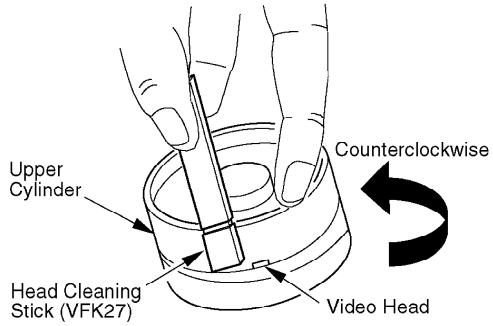

Note:

1. Do not rub vertically or apply excess pressure to the Video Heads. Do not turn the Upper Cylinder Unit clockwise while cleaning.
2. After cleaning, use a Dry Head Cleaning Stick (VFK27) to remove any Ethanol remaining on the cylinder tape path. Otherwise, tape damage will occur.

7.2.2. ADJUSTMENT PROCEDURES

7.2.2.1. BACK TENSION CONFIRMATION

Purpose:

To fine adjust the Back Tension so that the tape runs smoothly with a constant tension.

Symptom of Misadjustment:

1) If the tape tension is less than the specified value, the tape cannot come into proper contact with the Video Heads, resulting in poor picture playback.
2) If the tape tension is too high, the tape will soon be damaged.

Equipment Required:

Back Tension Meter (Made in U.S.A., Purchase Locally)
VHS Cassette Tape (120-Minute Tape)

Specification:

22.4 gf±2.5 gf

(0.220 N±0.025 N)

1. **Play back a T120 cassette tape from the beginning for approx. 10 to 20 seconds to stabilize tape movement.**
2. **Insert a Tension Meter into tape path and measure the back tension.**

Fig. M2-1

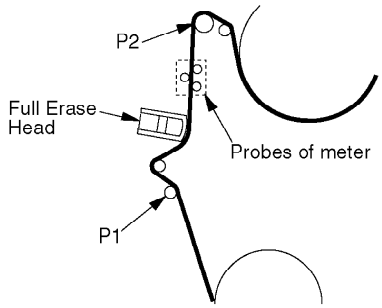

3. **If the reading is out of specification, make sure that there is no dust or foreign material between the Brake Pad of Tension Control Arm Unit and the S Reel Table.**
   After cleaning, the reading of tension measurement is still out of specification, replace the Tension Arm Unit and the Tension Control Arm Unit.

Fig. M2-2

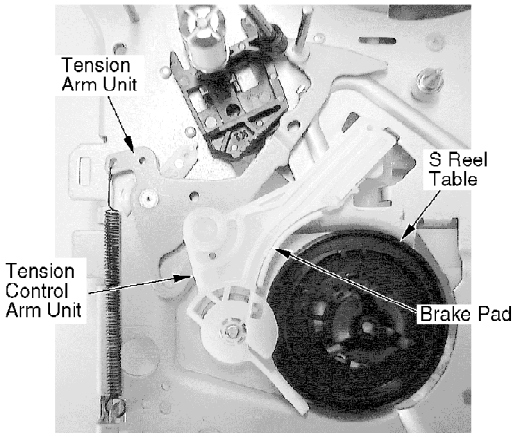

Note:

1. **Be sure that the three probes of the meter are all in solid contact with the tape, but not touching any other parts of the mechanism.**
2. **It is recommended that measurements should be repeated at least three (3) times because the tension meter is very sensitive to external vibrations.**

7.2.2.2. TAPE INTERCHANGEABILITY ADJUSTMENT

Note:

To perform these adjustment/confirmation procedures, set the tracking to the neutral position.

Equipment Required:

Dual Trace Oscilloscope
VHS Alignment Tape (VFMS0003H6)
Post Adjustment Driver (VFK0329)
H-Position Adjustment Driver (VFK0330)

7.2.2.2.1. ENVELOPE OUTPUT ADJUSTMENT

The height of the P2 and P3 Posts replacement part is preadjust at the factory.

Purpose:

To achieve a satisfactory picture and secure precise tracking.

Symptom of Misadjustment:

If the envelope is output poorly, much noise will appear in the picture. Then the tracking will lose precision and the playback picture will be distorted by any slight variation of the tracking control circuit.

Equipment Required:

Post Adjustment Driver (VFK0329)

1. **Place a jumper between TP6003 and +5 V(TP6009) on the Main C.B.A. to defeat Auto Tracking.**
2. **Eject the tape and insert it again to access the Neutral Tracking position.**
3. **Play back the alignment tape.**
4. **Connect the oscilloscope to TP3002 on the Video Signal Process Section of the Main C.B.A. Use TP6205 as a trigger.**
5. **Confirm that the RF envelope is flat enough (V1/V-max. is 0.7 or more). If not, with Post Adjustment Driver, adjust P2 and P3 post height so that the envelope waveform becomes as flat (V1/V-max. is 0.7 or more) as possible (Noenvelope drop). If the envelope drop appears on the left-half of the waveform, adjust P2 post height. If the envelope drop appears on the right-half of the waveform, adjust P3 post height.**

CAUTION:

Overtightening P2 and P3 posts may cause the threads to strip.

Note:

It will be possible to confirm Step 5 according to following steps.

1. **Press the Tracking Control Up or Down button on remote control. Make sure that the envelope waveform remains flat. If not, readjust P2 and/or P3 post heights.**

Fig. M3-1

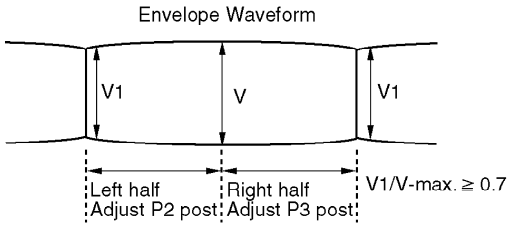

Fig. M3-2

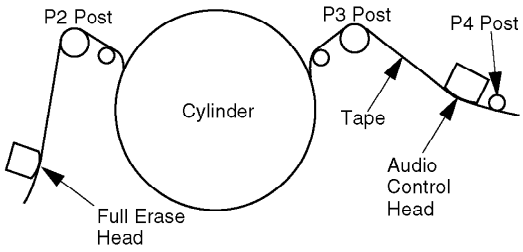

6. **After adjustment, confirm that the tape travels without curling at P2 and P3 posts.**

Fig. M3-3

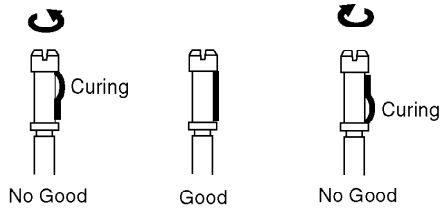

7. **Remove the jumper after completing the adjustment procedure.**

7.2.2.2.2. AUDIO CONTROL HEAD TILT ADJUSTMENT

Purpose:

To confirm that the tape runs smoothly. In particular, confirm that the tape properly picks up the Audio Signal at the upper part of the head and the Control Signal at the lower part of the head.

Symptom of Misadjustment:

If the tilt of the Audio Control Head is poorly adjusted, the tape

will eventually be damaged. An intermittent Blue screen may be seen in Playback.

1. **Play back a T120 cassette tape and check that the tape travels smoothly between the upper and lower guides of the P4 post.**
2. **If necessary, adjust Black Screw (B) clockwise until the tape begins to curl at the lower edge of the P4 post. Then adjust the screw counterclockwise until the curling is eliminated.**

Fig. M4

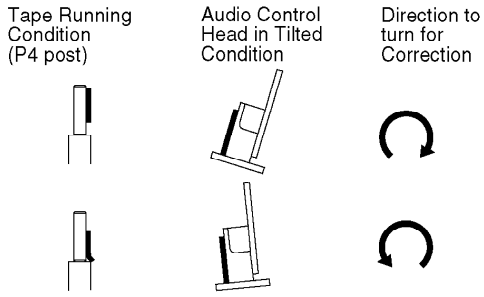

7.2.2.2.3. AUDIO CONTROL HEAD HEIGHT ADJUSTMENT

The height of the Audio Control Head replacement part is preset at the factory.

Purpose:

To be sure the tape runs properly along the Control Head.

Symptom of Misadjustment:

If the control signal is not properly picked up, Servo Operation cannot be achieved. A Blue screen will be seen in Playback.

This confirmation is required when the Audio Control Head is replaced.

1. **Play back a T120 cassette tape and check that the lower edge of the tape runs approximately 0.25 mm above the lower edge of the Audio Control Head.**
2. **If necessary, adjust Black Screws (A) and (B) clockwise to lower the tape or counterclockwise to raise.**

Fig. M5

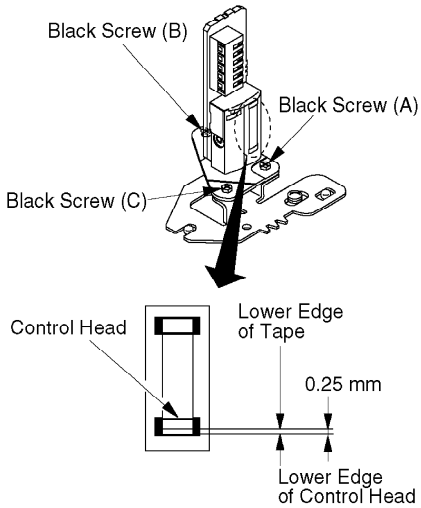

7.2.2.2.4. AUDIO CONTROL HEAD AZIMUTH ADJUSTMENT

Purpose:

To adjust the position and height of the Audio Control Head so that it meets the tape tracks properly.

Symptom of Misadjustment:

If the position of the Audio Control Head is not properly adjusted, the Audio S/N Ratio is poor.

1. **Connect the oscilloscope to the TP4002 on the Main C.B.A.**
2. **Play back the 6 kHz Monaural Audio portion of the alignment tape.**
3. **Adjust Black Screw (C) on the Audio Control Head base so that the output level is at maximum.**

Fig. M6

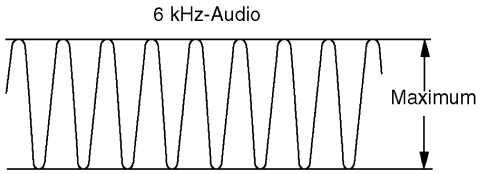

4. **Confirm the height of the Audio Control Head is proper. If not, readjust Black Screws (A) and (B).**

7.2.2.2.5. AUDIO CONTROL HEAD HORIZONTAL POSITION ADJUSTMENT

Purpose:

To adjust the Horizontal Position of the Audio Control Head.

Symptom of Misadjustment:

If the Horizontal Position of the Audio Control Head is not

properly adjusted, a maximum envelope cannot be obtained at the Neutral Position of the Tracking Control Circuit.

1. **Place a jumper between TP6003 and +5 V(TP6009) on the Main C.B.A. to defeat Auto Tracking.**
2. **Eject the tape and insert it again to access the Neutral Tracking position.**
3. **Play back the alignment tape.**
4. **Connect the oscilloscope to TP3002 on the Video Signal Process Section of the Main C.B.A. Use TP6205 as a trigger.**
5. **Loosen the Black Screw (D) and tighten it slightly. Set the H-Position Adjustment Driver into the Hole (A). Then slowly turn the fixture either clockwise or counterclockwise so that the envelope is at maximum.**

Fig. M7

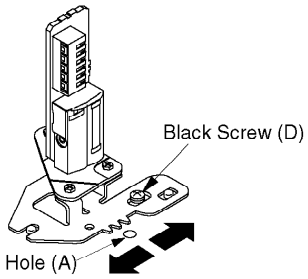

6. **Tighten Black Screw (D).**
7. **Remove the jumper between TP6003 and +5 V(TP6009).**

Note:

Old type of H-Position Adjustment Driver (VFK0136) can be used for this adjustment.

7.3. ELECTRICAL ADJUSTMENT

NOTE:

Following Adjustments have been preadjusted at factory and are not required.

- **Purity Adjustment**
- **Static Central Convergence Adjustment**
- **Dynamic Convergence Adjustment**

7.3.1. TEST EQUIPMENT

To do all of these electrical adjustments, the following equipment is required.

1. **Dual-Trace Oscilloscope**
   Voltage Range: 0.001 V to 50 V/Div.
   Frequency Range: DC to 50 MHz
   Probes: 10:1, 1:1
2. **NTSC Video Pattern Generator**
3. **DVM (Digital Volt Meter)**
4. **MTS/SAP Signal Generator**
   (TV Multi-Channel Sound Modulator (U.S.A.))
5. **Plastic Tip Driver and Non-Metal Driver**
6. **Isolation Transformer (Variable)**
7. **VHS Alignment Tape (VFMS0003H6)**
8. **Degaussing Coil**
9. **White Pattern Generator**
10. **Audio Generator**
11. **DVD Test Disc**

7.3.2. HOW TO READ THE ADJUSTMENT PROCEDURES

Fig. E1

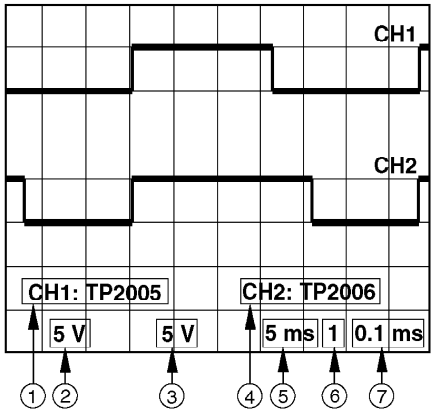

1. Connecting Point
3. Volts/DIV
5. Time/DIV
7. Time/DIV for Delay

2. Volts/DIV
4. Connecting Point
6. Trigger Channel of the Scope
   1 : CH1
   2 : CH2

7.3.3. STEREO/SAP SEPARATION ADJUSTMENT

Note:

Remove the DVD unit before performing this adjustment.

Purpose:

To separate the L and R Channels of Stereo Signal.

Symptom of Misadjustment:

The L and R Channels of Stereo Signal will not be separated properly resulting in no stereophonic effect.

Test Point :

TP9001 (Audio C.B.A.)

Adjustment :

R9001, R9008 (Audio C.B.A.)

Specification :

minimum level

INPUT :

Antenna Input Terminal
MTS (ONLY L CH)
300 Hz±5 Hz, 3 kHz±5 Hz
14 % or 7 % Modulating

Mode :

STEREO audio (TV)

Equipment :

Oscilloscope,
MTS/SAP Signal Generator

1. **Set to TV mode, and then set to STEREO audio.**
2. **Connect the RF OUTPUT of the MTS/SAP Signal Generator to the Antenna Input Terminal.**
   Then, set the MTS/SAP Signal Generator as follows.
   MTS (ONLY L CH)
   300 Hz±5 Hz
   14 % or 7 % Modulating
3. **Connect the Oscilloscope to TP9001 on the Audio C.B.A.**
4. **Adjust R9001 (SEP (L)) on the Audio C.B.A. so that the signal level of TP9001 is minimum.**
5. **Set the MTS/SAP Signal Generator as follows.**
   MTS (ONLY L CH)

3 kHz±5 Hz
14 % or 7 % Modulating

6. Adjust R9008 (SEP (H)) on the Audio C.B.A. so that the signal level of TP9001 is minimum.

Fig. E2

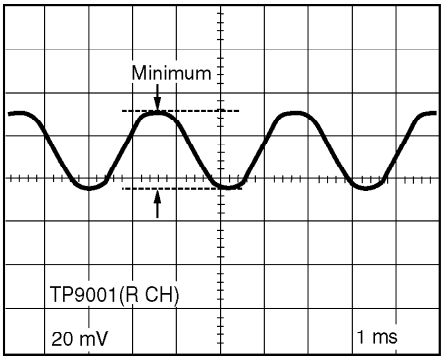

7.3.4. SEPARATION ADJUSTMENT

Note:

Be sure to perform this adjustment after STEREO/SAP SEPARATION ADJUSTMENT are completed.

Purpose:

To separate the L and R Channels of Stereo Signal.

Symptom of Misadjustment:

The L and R Channels of Stereo Signal will not be separated properly resulting in no stereophonic effect.

Test Point :

Pin 19 of P4203 or TP4202 (Audio C.B.A.)

Adjustment :

R9003 (Audio C.B.A.)

Specification :

minimum level

INPUT :

Antenna Input Terminal
MTS (ONLY L CH)
300 Hz±5 Hz
14 % or 7 % Modulating

Mode :

STEREO audio (TV)

Equipment :

Oscilloscope, MTS/SAP Signal Generator

1. **Connect the RF OUTPUT of the MTS/SAP Signal Generator to the Antenna Input Terminal.**
2. **Connect the Oscilloscope to Pin 19 of P4203 or TP4202 on the Audio C.B.A**
3. **Set to TV mode, and then set to STEREO audio.**
4. **Adjust R9003 on the Audio C.B.A. so that the signal level is minimum.**

Fig. E3

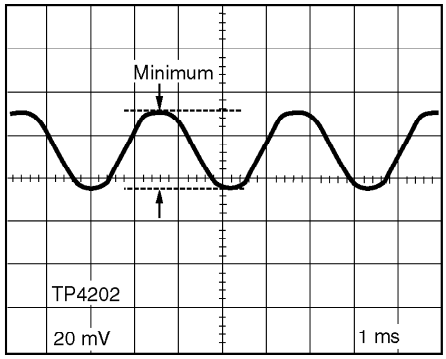

7.3.5. FM VCO ADJUSTMENT

Note:

Remove the DVD unit before performing this adjustment.

Purpose:

To set VCO free run frequency.

Symptom of Misadjustment:

Even when stereophony is received, only monaural sound will be output.

Test Point :

Pin 36 of P4204, TP9201 (Audio C.B.A.)

Adjustment :

R9206 (Audio C.B.A.)

Specification :

38.0 kHz±50 Hz

INPUT :

Mode :

STEREO audio (FM Radio)

Equipment :

Frequency Counter

1. Connect Pin 36 of P4204 on Audio C.B.A. to GND.

Fig. E4-1

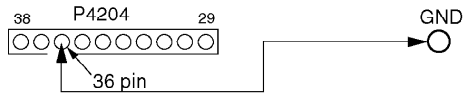

2. Connect TP9201 on Audio C.B.A. to GND through a resistor (3.3 k Ω). Then, connect Frequency Counter to TP9201.

Fig. E4-2

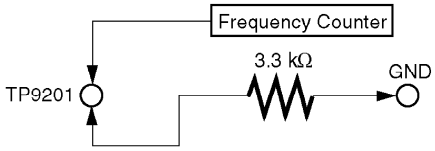

3. Adjust R9206 (FM VCO) so that the frequency is 38.0 kHz ±50 Hz.

7.3.6. DVD LUMINANCE LEVEL ADJUSTMENT

Purpose:

To set the optimum luminance level for DVD.

Symptom of Misadjustment:

The picture is too bright or too dark.

Test Point :

TP8201 (DVD DECODER C.B.A.)

Adjustment :

R8299 (DVD DECODER C.B.A.)

Specification :

1.0 V[P-P]±50 mV[P-P]

INPUT :

Mode :

DVD PLAY

Equipment :

Oscilloscope, DVD Test Disc

1. **Playback 100% Flat Field on the DVD Test Disc in DVD PLAY Mode.**
2. **Connect the Oscilloscope to TP8201 on the DVD DECODER C.B.A. and GND (TP8203 on the DVD DECODER C.B.A.).**
3. **Adjust R8299 on the DVD DECODER C.B.A. so that the level A becomes 1.0 V[P-P]±50 mV[P-P].**

Fig. E5

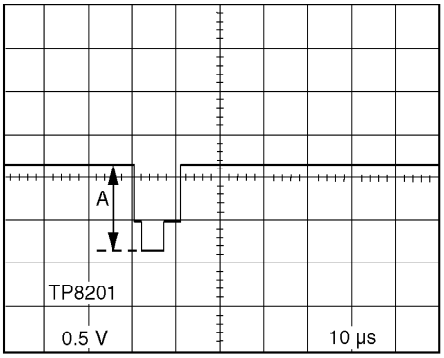

7.3.7. EVR (Electronic Variable Register) ADJUSTMENT WITH THE REMOTE CONTROL

This unit has electronic technology using I2C Bus concept.The following control functions are adjusted by using "On Screen Displays" and the remote control instead of adjusting mechanical controls (VR).

Control functions	※1 Address	Range	Default
SUB COLOR	00	C0 - FF, 00 - 3F	00
SUB TINT	01	E0 - FF, 00 - 1F	00
SUB BRIGHT	02	C0 - FF, 00 - 3F	F0
CONTRAST	03	C1 - FF, 00	00
SUB SHARPNESS	04	E0 - FF, 00 - 1F	E8
R CUT -OFF	05	00 - 7F	1E
G CUT -OFF	06	00 - FD	3C
B CUT -OFF	07	00 - FD	3C
G DRIVE	08	00 - 7F	40
B DRIVE	09	00 - 7F	40
SUB CONTRAST	0A	00 - 0F	06
H-CENTER	0B	00 - 0F	08
V SIZE	0D	00 - 7F	40
V POSITION	0E	00 - 7F	40
PG SHIFTER	15	00 - FD	80

Bold-faced letters → Control functions which need to be adjusted.

Note:

※1 Address is not displayed on the TV screen.
Other Addresses except above are not used.

7.3.7.1. EVR ADJUSTMENT ITEM

The following Items need to be adjusted for EVR adjustment.

- **PG SHIFTER ADJUSTMENT**
- **SUB CONTRAST ADJUSTMENT**

- CUT OFF, DRIVE ADJUSTMENT
- SUB COLOR/SUB TINT ADJUSTMENT
- V. HEIGHT/H. POSITION ADJUSTMENT
- WHITE BALANCE ADJUSTMENT
- SUB BRIGHTNESS ADJUSTMENT

7.3.7.2. How to enter EVR adjustment mode

Press and hold STOP/EJECT, PLAY/REPEAT and VOL- buttons of VCR operation panel on the unit together over 5 seconds with no cassette inserted.
The adjustment overlay will appear to Enter EVR adjustment mode.

Fig. E6-1

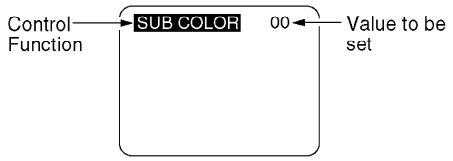

7.3.7.2.1. How to adjust:

1. **Press UP/DOWN ▲ ▼ key on the remote control to select control function to be adjusted.**
   Important Note:
   Make a note of the original value of the controls before modifying in case the wrong control is adjusted.
2. **Press RIGHT/LEFT ◀ ▶ key on the remote control so that the shaded area moves to the value.**

Fig. E6-2

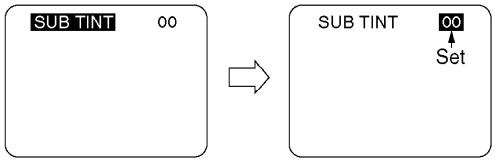

3. **Press UP/DOWN ▲ ▼ key on the remote control to adjust the value of the selected control.**

Fig. E6-3

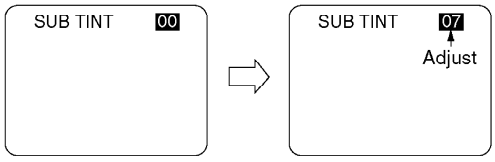

Note:
You can select a desired channel by using the numbered keys on the remote control in EVR adjustment mode.

4. Press RIGHT/LEFT ◀ ▶ key on the remote control so that the shaded area moves to the control function.

Fig. E6-4

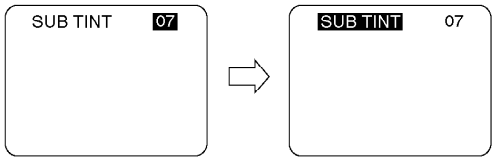

5. Press UP/DOWN ▲ ▼ key on the remote control to select a control function for the next adjustment if necessary.

Fig. E6-5

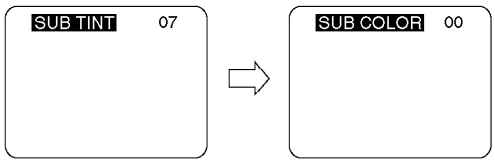

7.3.7.2.2. How to release from EVR Adjustment Mode:

Press and hold STOP/EJECT, PLAY/REPEAT and VOL- buttons of VCR operation panel on the unit together over 5 seconds again or press the POWER button OFF to release EVR adjustment mode. The adjusted value will be written to Memory IC(IC6004).

7.3.7.3. HOW TO ENTER EVR PG SHIFTER ADJUSTMENT MODE

1. Enter EVR adjustment mode.

2. Insert the VHS Alignment Tape and playback in SP mode. The adjustment overlay will appear.

Fig. E6-6

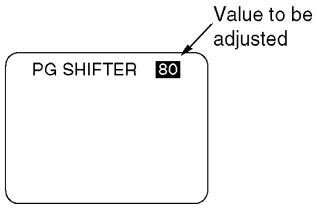

7.3.7.3.1. How to adjust:

Press UP/DOWN ▲ ▼ key on the remote control to adjust the value.

Fig. E6-7

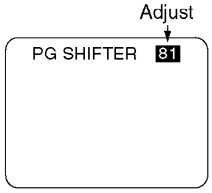

7.3.7.4. HOW TO ENTER SERVICE MODE

1. Set the unit to TV Mode.

2. Enter EVR adjustment mode.

3. Press DISPLAY key on the remote control for collapse scan.

Note:

Before pressing DISPLAY key on the remote control for collapse scan, select the desired control function and move the shaded area to the value for adjustments you will proceed.

Fig. E6-8

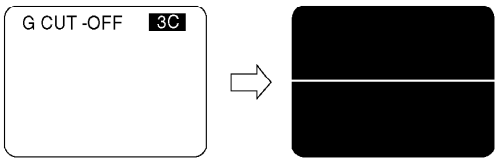

7.3.7.4.1. How to release from Service Mode:
Press DISPLAY key again on the remote control.

7.3.8. PG SHIFTER ADJUSTMENT

Purpose:

Determine the Video Head Switching Point during Playback.

Symptom of Misadjustment:

May cause Head Switching Noise and/or Vertical Jitter.

Test Point :

TP3001 (Main C.B.A.),
TP6205 (Main C.B.A.)

Adjustment :

PG SHIFTER (EVR)

Specification :

6 H±1 H (0.38 ms±0.06 ms)

INPUT :

Mode :

SP Playback

Equipment :

Oscilloscope,
VHS Alignment Tape (VFMS0003H6)

1. Insert the VHS Alignment Tape and playback in SP mode.

2. Connect the channel-1 scope probe to TP3001 and the channel-2

scope probe to TP6205. Used TP6205 as a trigger.

3. Select PG SHIFTER in EVR adjustment mode and adjust value so that the trailing edge of the head switching pulse is placed 6 H±1 H (0.38 ms±0.06 ms) before the start of the vertical sync pulse.

Fig. E7

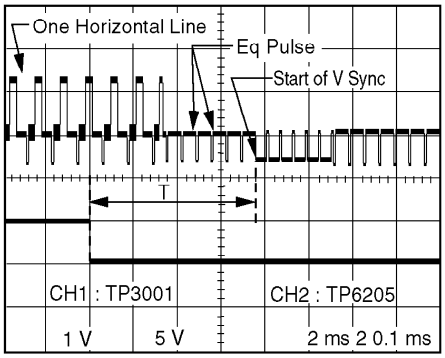

7.3.9. SUB CONTRAST ADJUSTMENT

Purpose:

To set the optimum sub contrast level.

Symptom of Misadjustment:

The picture is too dark or too light.

Test Point :

Pin 5 of P6001 (Main C.B.A.)
or TP49 (CRT C.B.A.)

Adjustment :

SUB CONTRAST (EVR),

Specification :

2.6 V[p-p]±0.1 V[p-p]

INPUT :

Video Input Jack,
Crosshatch Pattern Signal 1 V[p-p]
(75 Ω terminated)

Mode :

STOP

Equipment :

Oscilloscope,

NTSC Video Pattern Generator

1. **Supply a Crosshatch Pattern Signal to the Video Input Jack.**
2. **Connect the Oscilloscope to Pin 5 of P6001 on the Main C.B.A. or TP49 on the CRT C.B.A.**
3. **Select SUB BRIGHT in EVR adjustment mode. Then, after making a note of the original value, adjust to the (D0).**
4. **Select SUB CONTRAST in EVR adjustment mode and adjust so that the level A is 2.6 V[p-p]±0.1 V[p-p].**
5. **Select SUB BRIGHT in EVR adjustment mode and reset to the original value.**

Fig. E8

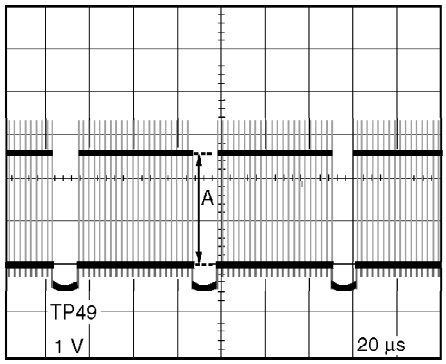

7.3.10. FOCUS, SCREEN, CUT OFF, DRIVE ADJUSTMENT

Purpose:

To set the optimum Focus and Screen.

Symptom of Misadjustment:

The picture is out of Focus and there will be an improper screen color mix.

Test Point :

TP50 (CRT C.B.A.)

Adjustment :

FOCUS CONTROL (Flyback Transformer),
SCREEN CONTROL (Flyback Transformer),
SUB BRIGHT (EVR),
B DRIVE (EVR),
G DRIVE (EVR),
B CUT -OFF (EVR),

G CUT -OFF (EVR),
R CUT -OFF (EVR)

Specification :

Refer to descriptions below.

INPUT :

Video Input Jack,
Monoscope Pattern Signal

Mode :

STOP

Equipment :

Oscilloscope,
NTSC Video Pattern Generator

1. **Supply a Monoscope Pattern Signal to the Video Input Jack.**
2. **Connect the Oscilloscope to TP50 on the CRT C.B.A. (Use TP47 for GND.)**
3. **Select SUB BRIGHT and move the shaded area to the value in EVR adjustment mode.**
4. **Adjust the FOCUS CONTROL on the Flyback Transformer so that the center of picture is the sharpest.**
5. **Turn the SCREEN CONTROL on the Flyback Transformer fully counterclockwise.**
6. **Select SUB BRIGHT and move the shaded area to the data in EVR adjustment mode.**
7. **Press DISPLAY key on the remote control for collapse scan. (Refer to "HOW TO ENTER SERVICE MODE.")**
8. **Adjust SUB BRIGHT in EVR adjustment mode so that the level A is 185 VDC±5 VDC.**

Fig. E9

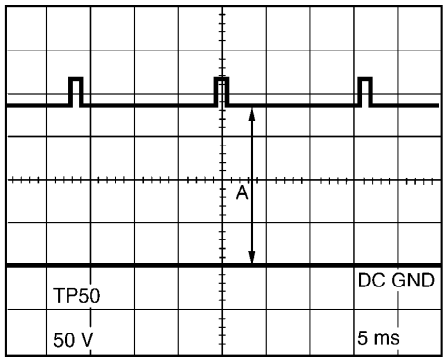

9. Turn the SCREEN CONTROL on the Flyback Transformer clockwise carefully and stop at the point where any color is first observed.

10. In EVR adjustment mode, select the two colors not observed in step 9 from the following control functions (B CUT-OFF, G CUT-OFF or R CUT-OFF) and adjust so that the horizontal line becomes white.
    For example, if the horizontal line appeared red in step 9, select and adjust the B CUT-OFF and G CUT-OFF.
    (See NOTE)

11. Press DISPLAY key on the remote control again to return for full frame scan.

12. Select SUB BRIGHT in EVR adjustment mode and adjust so that the picture has adequate brightness.

13. Select G DRIVE and B DRIVE in EVR adjustment mode and adjust so that the entire screen is white.

Note:

Before pressing DISPLAY key on the remote control for collapse scan, select the desired control function and move the shaded area to the value.

7.3.11. SUB COLOR/SUB TINT ADJUSTMENT

Purpose :

To set the standard color phase.

Symptom of Misadjustment :

Color phase will be shifted.

Test Point :

Pin 5 of P6001 (Main C.B.A.)

or TP49 (CRT C.B.A.)

Adjustment :

SUB COLOR (EVR), SUB TINT (EVR)

Specification :

C = 1.30 V[p-p]±0.15 V[p-p]

INPUT :

Video Input Jack, Rainbow Color Bar

Mode :

STOP

Equipment :

Oscilloscope, NTSC Video Pattern Generator

1. **Supply the Rainbow Color Bar signal to Video Input Jack.**
2. **Select SUB BRIGHT in EVR adjustment mode. Then, after making a note of the original value, adjust to the minimum (C0).**
3. **Connect the Oscilloscope to Pin 5 of P6001 on the Main C.B.A. or TP49 on the CRT C.B.A.**
4. **Select SUB TINT in EVR adjustment mode and adjust so that level A and B should be equal in amplitude.**

Fig. E10-1

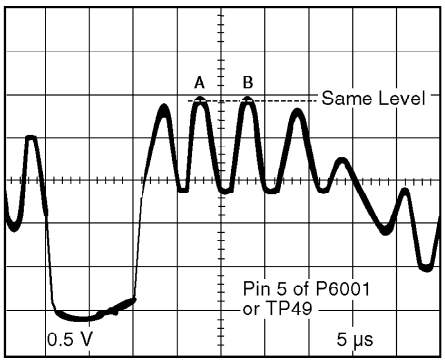

5. **Select SUB COLOR in EVR adjustment mode and adjust so that the level C is 1.30 V[p-p]±0.15 V[p-p].**

Fig. E10-2

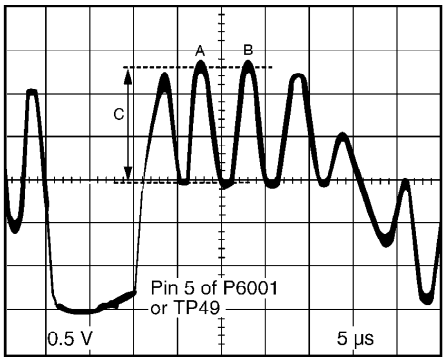

6. Select SUB BRIGHT in EVR adjustment mode and reset to the original value.

7.3.12. V. HEIGHT/H. POSITION ADJUSTMENT

Purpose :

To set the standard vertical and horizontal picture size.

Symptom of Misadjustment :

The picture size is on the vertical and horizontal axis is abnormal.

Test Point :

Adjustment :

V SIZE (EVR),
H-CENTER (EVR)
V POSITION (EVR)

Specification :

Refer to descriptions below.

INPUT :

Video Input Jack,
Monoscope Pattern Signal

Mode :

STOP

Equipment :

NTSC Video Pattern Generator

1. Supply a Monoscope Pattern Signal to the Video Input Jack.

2. Select H-CENTER in EVR adjustment mode and adjust so that A is approximately equal to width B.

3. Select V SIZE in EVR adjustment mode and adjust so that the top 4th line is just in view.
4. Confirm that the bottom 3rd line is in view and that the bottom 4th line is out of view.
5. If the line are not positioned correctly, select V POSITION in adjustment mode and adjust correctly.

Fig. E11

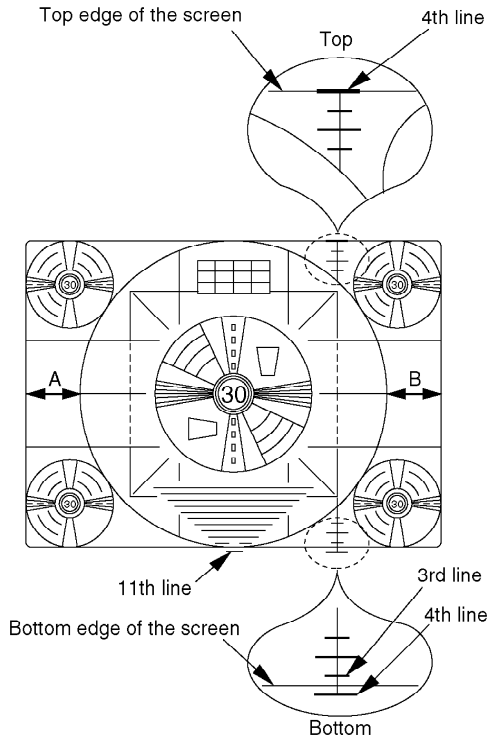

7.3.13. WHITE BALANCE ADJUSTMENT

Purpose:

To set the standard white level for each color temperature.

Symptom of Misadjustment :

White becomes bluish or reddish.

Test Point :

TP50 (CRT C.B.A)

Adjustment :

FOCUS CONTROL (Flyback Transformer),
SCREEN CONTROL (Flyback Transformer),
SUB BRIGHT (EVR)

G DRIVE (EVR),
B DRIVE (EVR),
R CUT -OFF (EVR),
G CUT -OFF (EVR),
B CUT -OFF (EVR),

Specification :

Refer to descriptions below.

INPUT :

Video Input Jack,
Monoscope Pattern Signal,
White Pattern Signal

Mode :

STOP

Equipment :

NTSC Video Pattern Generator,
White Pattern Generator,
Oscilloscope

1. **Supply a Monoscope Pattern Signal to the Video Input Jack.**
2. **Connect the Oscilloscope to TP50 on the CRT C.B.A. (Use TP47 for GND.)**
3. **Select SUB BRIGHT and move the shaded area to the value in EVR adjustment mode.**
4. **Adjust the FOCUS CONTROL on the Flyback Transformer so that the center of picture is the sharpest.**
5. **Press DISPLAY key on the remote control for collapse scan. (Refer to "HOW TO ENTER SERVICE MODE.")**
6. **Turn the SCREEN CONTROL on Flyback Transformer fully counterclockwise.**
7. **Adjust SUB BRIGHT in EVR adjustment mode so that the level A is 185 VDC±5 VDC.**

Fig. E12

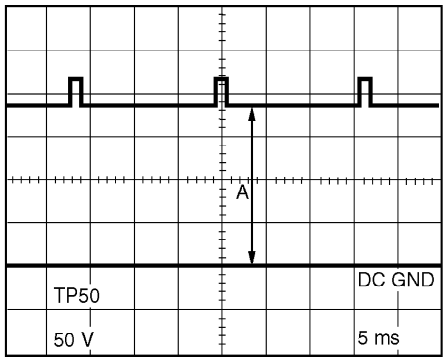

8. Turn the SCREEN CONTROL on the Flyback Transformer clockwise carefully and stop at the point where any color is first observed.
9. In EVR adjustment mode, select the two colors not observed in step 8 from the following control functions (B CUT -OFF, G CUT -OFF, or R CUT -OFF) and adjust so that the horizontal line becomes white.
   For example, if the horizontal line appeared red in step 8, select and adjust the B CUT -OFF and G CUT -OFF.
10. Supply a White Pattern Signal to the Video Input Jack.
11. Press DISPLAY key on the remote control again to return for full frame scan.
12. Select G DRIVE and B DRIVE in EVR adjustment mode and adjust so that the entire screen is white.
13. Select SUB BRIGHT in EVR adjustment mode. Then, after making a note of the original value, adjust to the minimum (C0) and while turning SUB BRIGHT value from minimum (C0) up to maximum (3F), confirm that the screen is tracking the White Patternproperly. Repeat the above steps 5, 9, 11, and 12 until the screen is properly tracking the White Pattern.

Note:

Before pressing DISPLAY key on the remote control for collapse scan, select the desired control function and move the shaded area to the value.

7.3.14. SUB BRIGHTNESS ADJUSTMENT

Note:

Perform this adjustment in a darkened room.

Purpose :

To set the optimum brightness level.

Symptom of Misadjustment :

The picture is too white or too black.

Test Point :

Adjustment :

SUB BRIGHT (EVR)

Specification :

Refer to descriptions below.

INPUT :

Mode :

STOP

1. **Do not input any signal to the unit.**
2. **Set INPUT SELECT item to LINE in SET UP TV menu to display black screen.**
3. **Select SUB BRIGHT in EVR adjustment mode, and adjust so that the black screen starts to turn gray (lighting only).**

7.4. TEST POINTS AND CONTROL LOCATION

Main C.B.A.

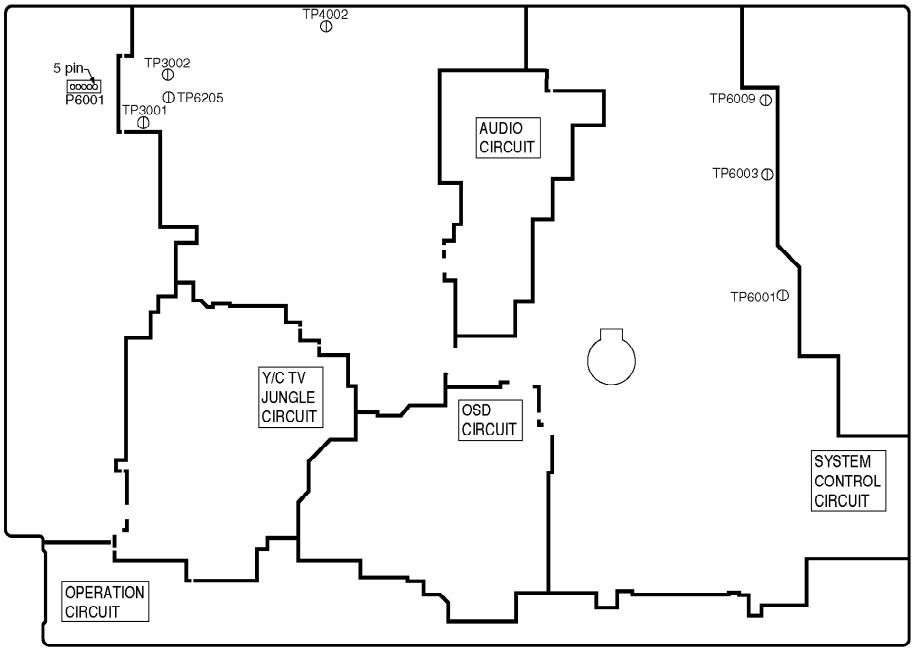

(Component Side)

FUNCTION OF IMPORTANT TEST POINTS	
TP3001	Video Signal
TP3002	REC/PB Video envelope signal
TP4002	Normal Audio signal
TP6001	Service Test Point (inhibit sensors)
TP6003	Defeat Auto tracking function (connect to +5V(TP6009))
TP6009	+5V
TP6205	Head SW.

Test Point Information

● Test Point with a Test Pin.

◐ Test Point with a jumper wire across a hole in the P.C.B.

○ Test Point with no Test Pin.

Audio C.B.A.

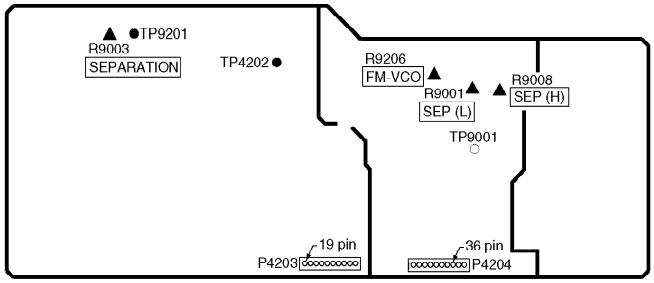

(Foil Side)

CRT C.B.A.

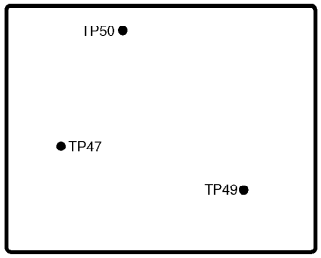

(Foil Side)

DVD DECODER C.B.A.

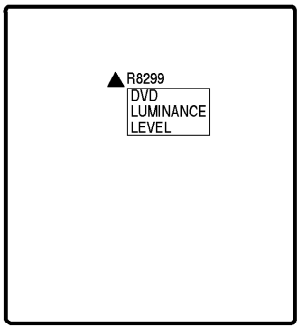

(Component Side)

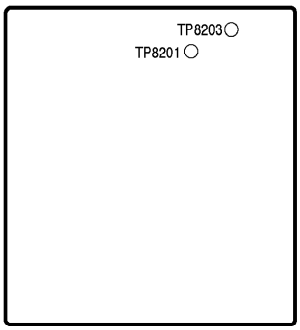

(Foil Side)

8. SCHEMATIC DIAGRAMS

8.1. SCHEMATIC DIAGRAM AND CIRCUIT BOARD LAYOUT NOTES

8.2. MAIN SCHEMATIC DIAGRAMS

8.3. AUDIO SCHEMATIC DIAGRAMS

8.4. AUDIO AMP SCHEMATIC DIAGRAM

8.5. POWER SUPPLY SCHEMATIC DIAGRAM

8.6. TV MAIN SCHEMATIC DIAGRAMS

8.7. CRT SCHEMATIC DIAGRAM

8.8. VERTICAL SCHEMATIC DIAGRAM

8.9. OPERATION SCHEMATIC DIAGRAM
8.10. AUDIO/VIDEO JACK SCHEMATIC DIAGRAM
8.11. Hi-Fi AUDIO/VIDEO HEAD AMP SCHEMATIC DIAGRAM
8.12. DVD DECODER SCHEMATIC DIAGRAMS
8.13. INTERCONNECTION SCHEMATIC DIAGRAM
8.14. VOLTAGE CHART
9. CIRCUIT BOARD LAYOUT
9.1. MAIN C.B.A.
9.2. AUDIO C.B.A.
9.3. TV MAIN C.B.A.
9.4. POWER SUPPLY C.B.A.
9.5. DVD DECODER C.B.A.
9.6. Hi-Fi AUDIO/VIDEO HEAD AMP C.B.A.
9.7. VERTICAL C.B.A.
9.8. CRT C.B.A.
9.9. AUDIO AMP C.B.A.
9.10. OPERATION C.B.A.
9.11. AUDIO/VIDEO JACK C.B.A.
10. BLOCK DIAGRAMS
11. EXPLODED VIEWS
11.1. MECHANISM (TOP) SECTION

❶ MECHANISM (TOP) SECTION

LUBRICATION POINTS
When the marked parts are replaced, apply the recommended lubricants or adhesive for better maintenance of the unit.

Mark	Kind of Lubricant	Availability	Part Number
△△△	Grease	Available from Factory	VFKS0081

Note: Parts with no Ref. No. in "EXPLODED VIEWS" are not supplied. And some Ref. No. will be skipped. Be sure to make your orders of replacement parts according to the parts list.

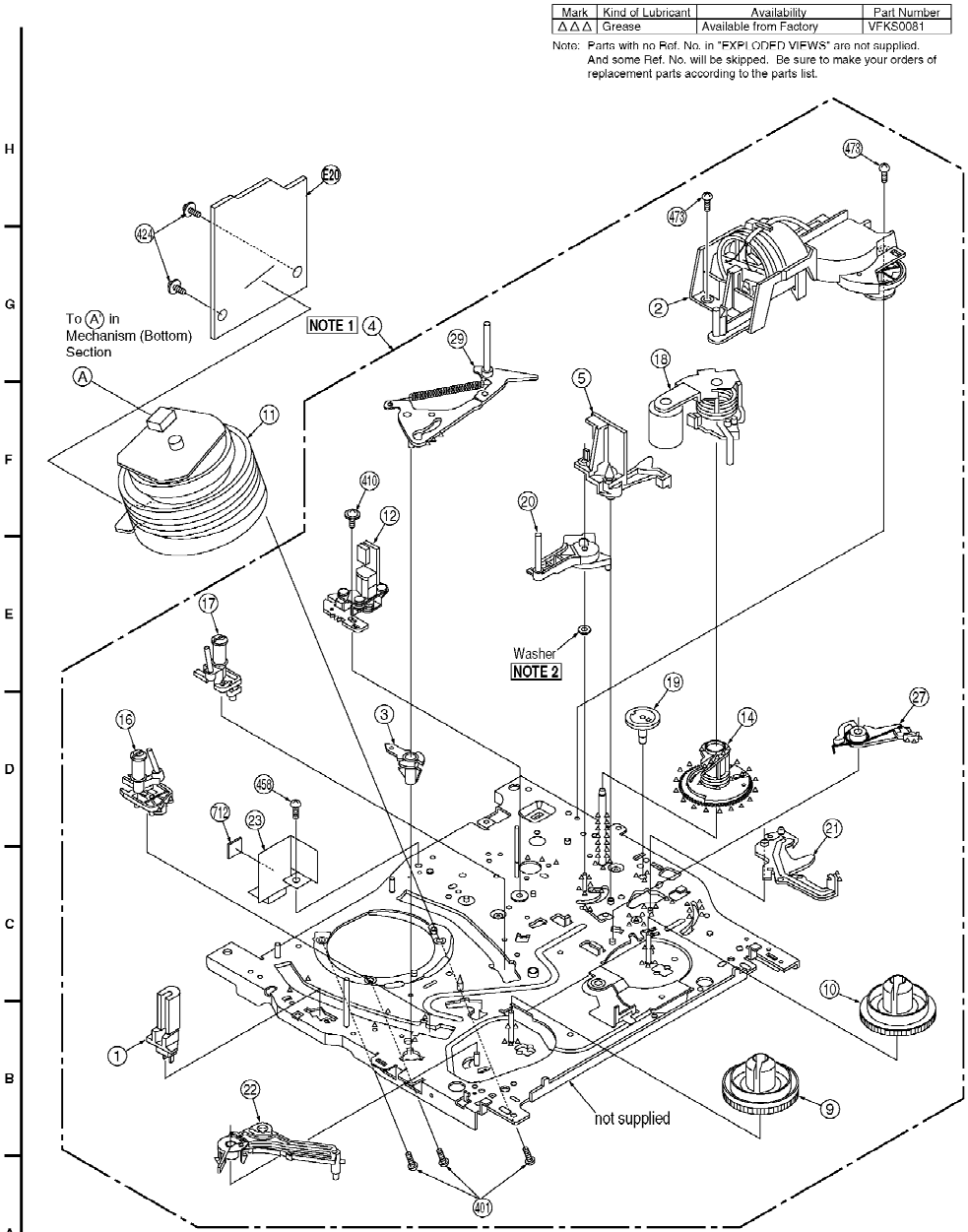

NOTE 1: The Mechanical Chassis Sub Ass'y (Ref. No. 4) consists of all the mechanical parts except the Cylinder Unit (Ref. No. 11) and the Cassette Up Ass'y (Ref. No. 61). After replacing the Mechanical Chassis Sub Ass'y, be sure to perform "TAPE INTERCHANGEABILITY ADJUSTMENT" in MECHANICAL ADJUSTMENT procedures.

NOTE 2: In early units, a washer is used.
When servicing the washer or the P5 Arm Unit, replace only the P5 Arm Unit with a new one, and remove the washer.

11.2. MECHANISM (BOTTOM) SECTION

❷ MECHANISM (BOTTOM) SECTION

LUBRICATION POINTS
When the marked parts are replaced, apply the recommended lubricants or adhesive for better maintenance of the unit.

Mark	Kind of Lubricant	Availability	Part Number
△△△	Grease	Available from Factory	VFKS0081

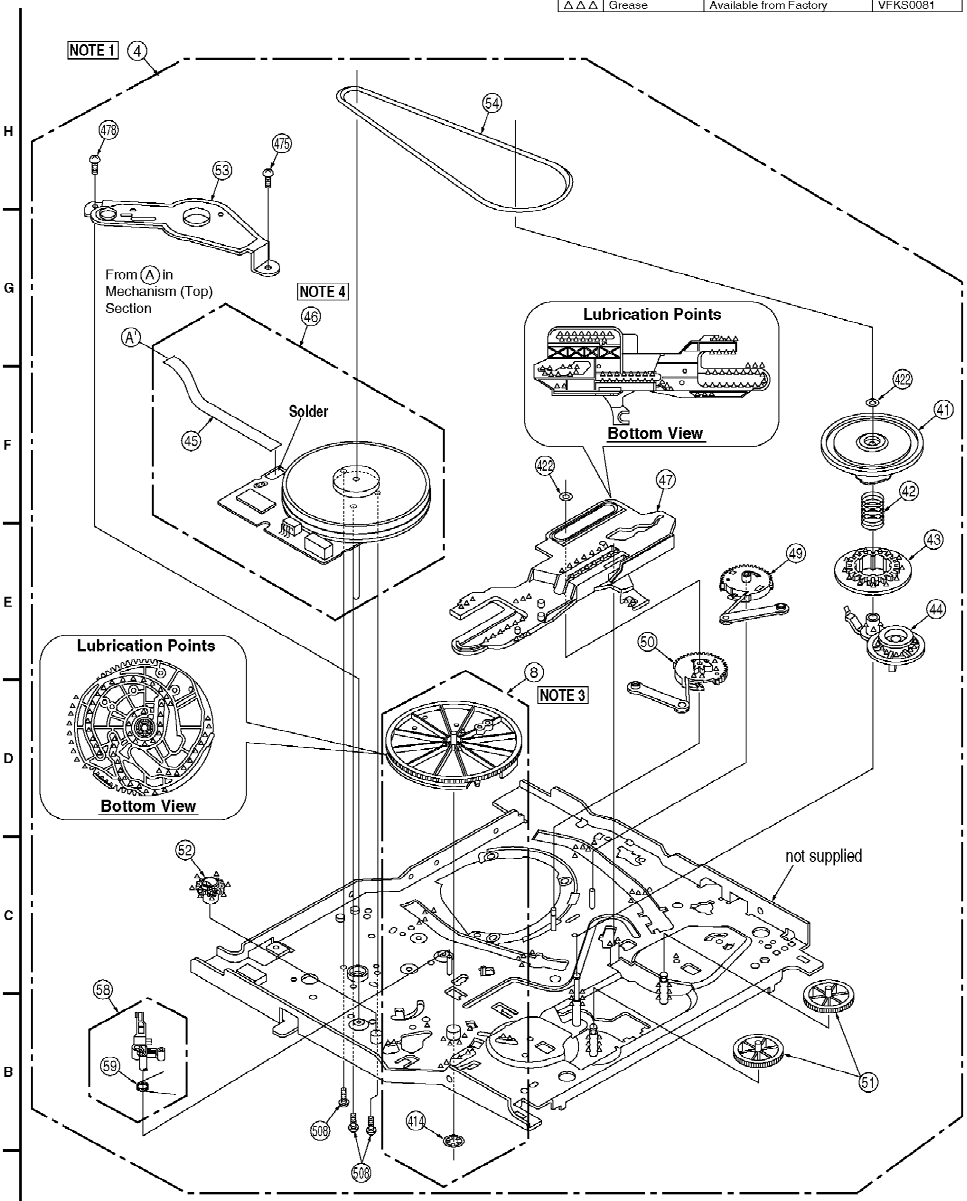

NOTE 1: The Mechanical Chassis Sub Ass'y (Ref. No. 4) consists of all the mechanical parts except the Cylinder Unit (Ref. No. 11) and the Cassette Up Ass'y (Ref. No. 61). After replacing the Mechanical Chassis Sub Ass'y, be sure to perform "TAPE INTERCHANGEABILITY ADJUSTMENT" in MECHANICAL ADJUSTMENT procedures.

NOTE 3: Main Cam Gear is supplied as a Main Cam Gear Kit only. Main Cam Gear Kit consists of a Main Cam Gear and a Main Cam Push Nut. However, Main Cam Push Nut is available separately as a replacement part.

NOTE 4: The Capstan Motor Ass'y (Ref. No. 46) is supplied as a unit only. However, the Flat Flexible Cable (Ref. No. 45) is available separately as a replacement part.

11.3. CASSETTE UP COMPARTMENT SECTION

❸ CASSETTE UP COMPARTMENT SECTION

LUBRICATION POINTS
When the marked parts are replaced, apply the recommended lubricants or adhesive for better maintenance of the unit.

Mark	Kind of Lubricant	Availability	Part Number
△△△	Grease	Available from Factory	VFKS0081

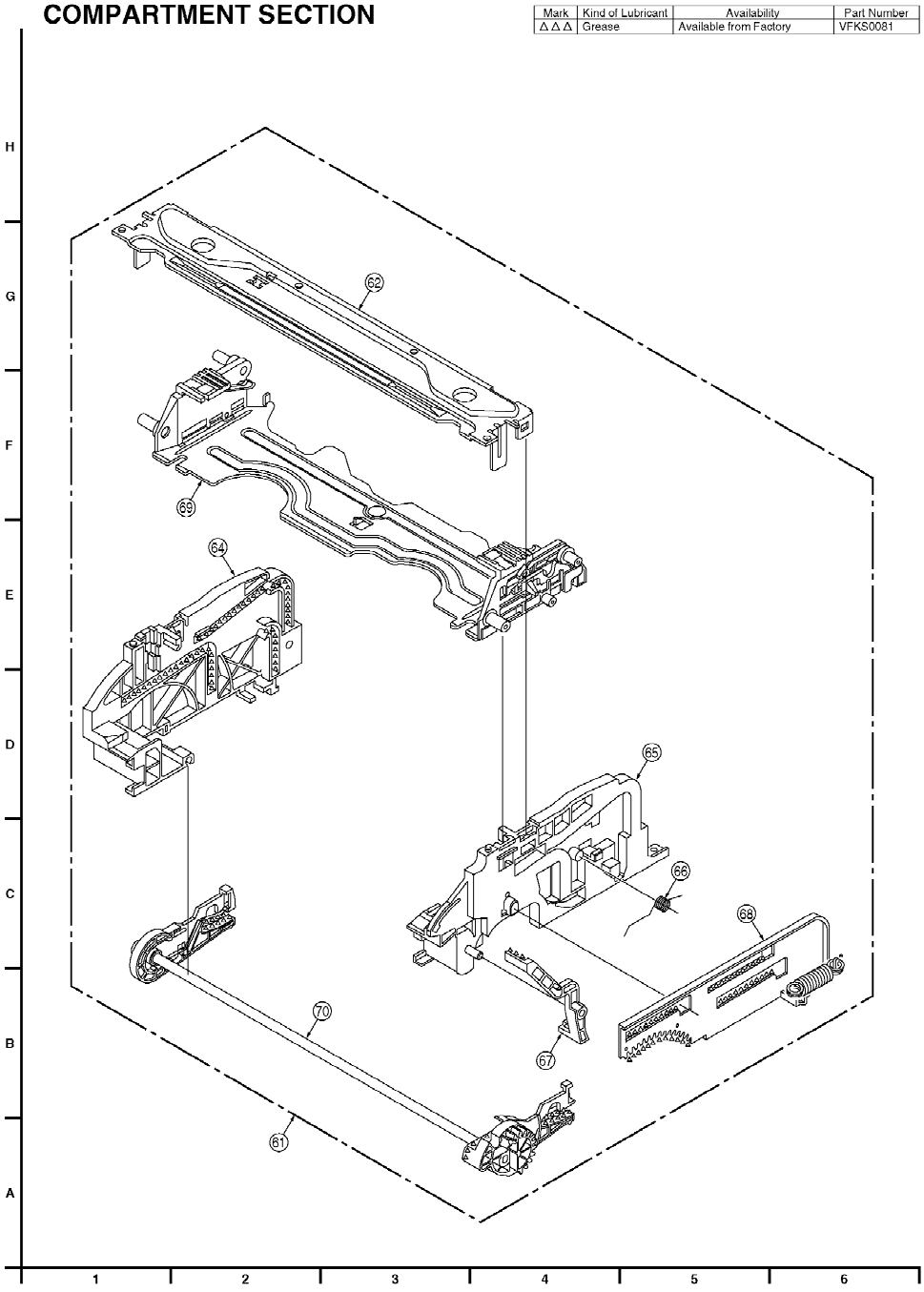

11.4. CHASSIS FRAME SECTION (1)

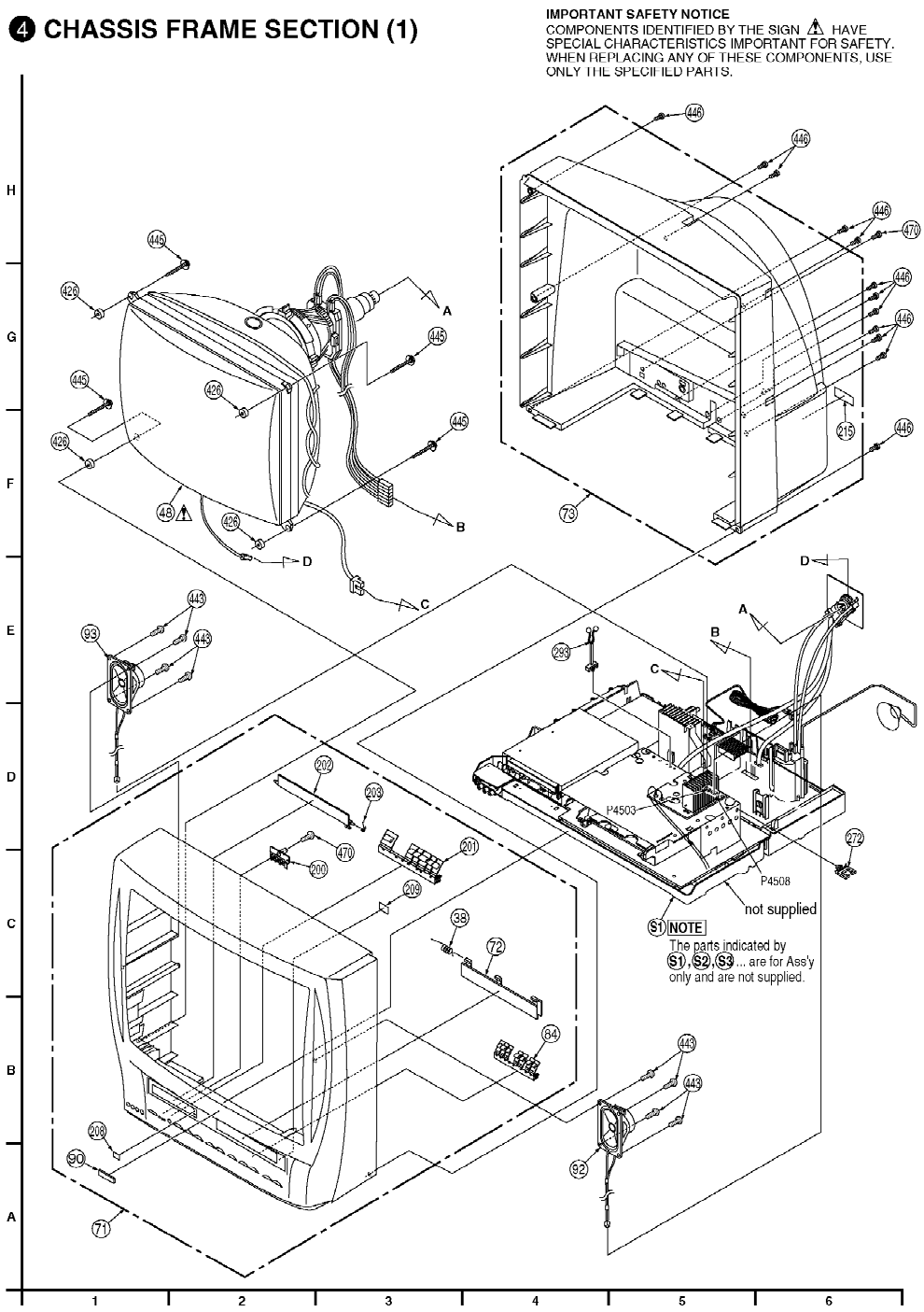

11.5. CHASSIS FRAME SECTION (2)

❺ CHASSIS FRAME SECTION (2)

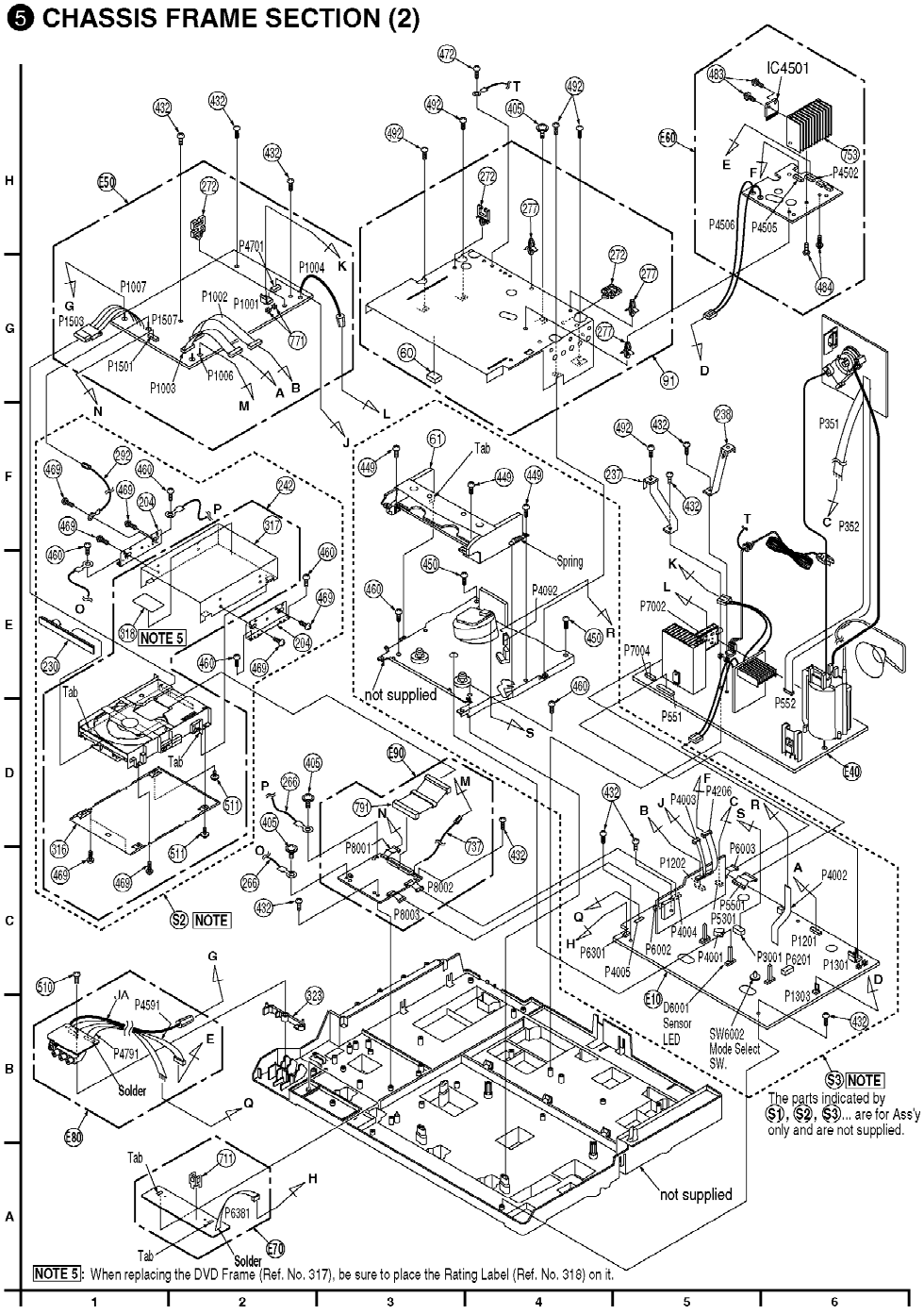

11.6. CHASSIS FRAME SECTION (3)

❻ CHASSIS FRAME SECTION (3)

IMPORTANT SAFETY NOTICE
COMPONENTS IDENTIFIED BY THE SIGN ⚠ HAVE SPECIAL CHARACTERISTICS IMPORTANT FOR SAFETY. WHEN REPLACING ANY OF THESE COMPONENTS, USE ONLY THE SPECIFIED PARTS.

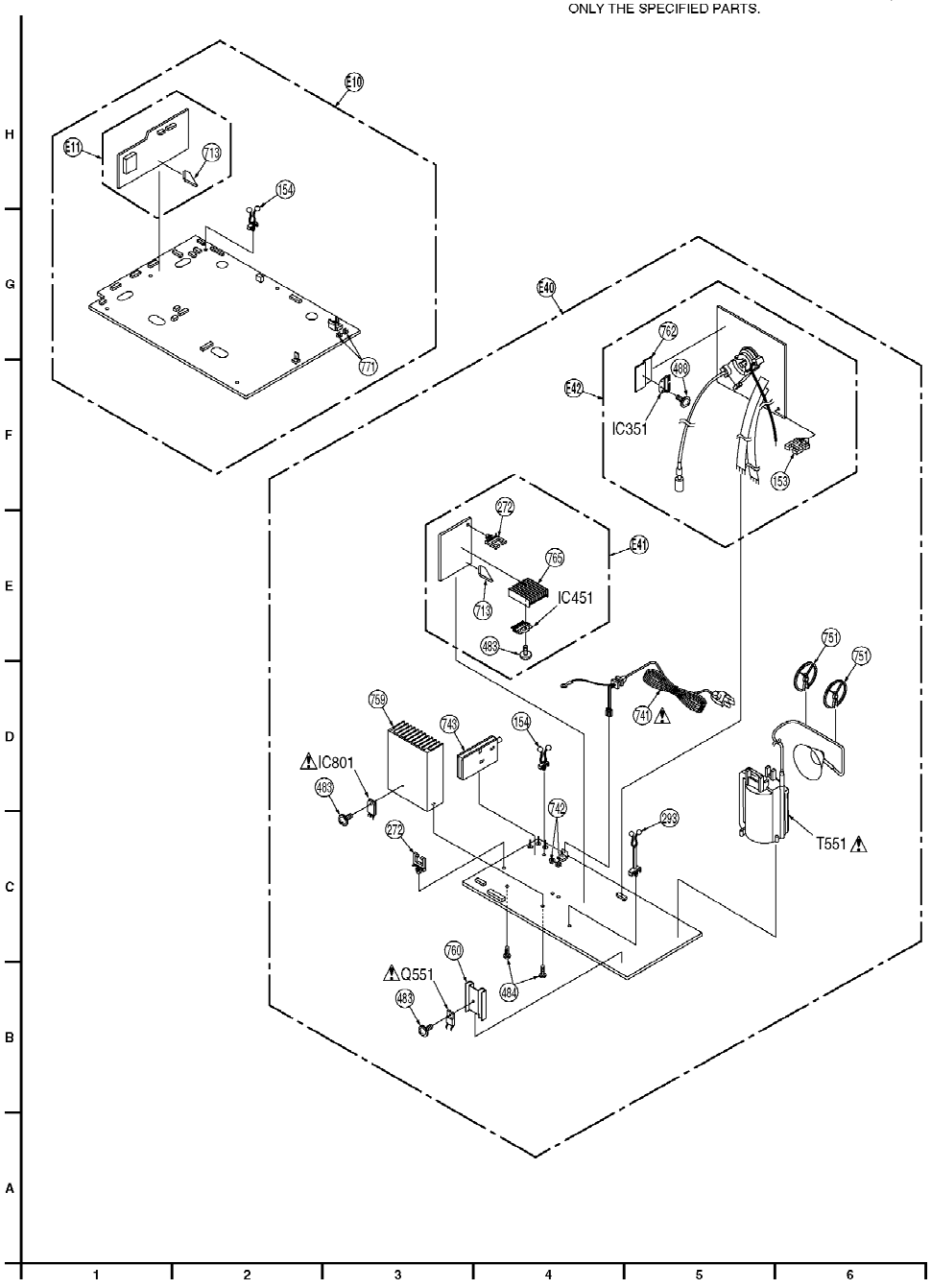

11.7. PACKING PARTS AND ACCESSORIES SECTION

❼ PACKING PARTS AND ACCESSORIES SECTION

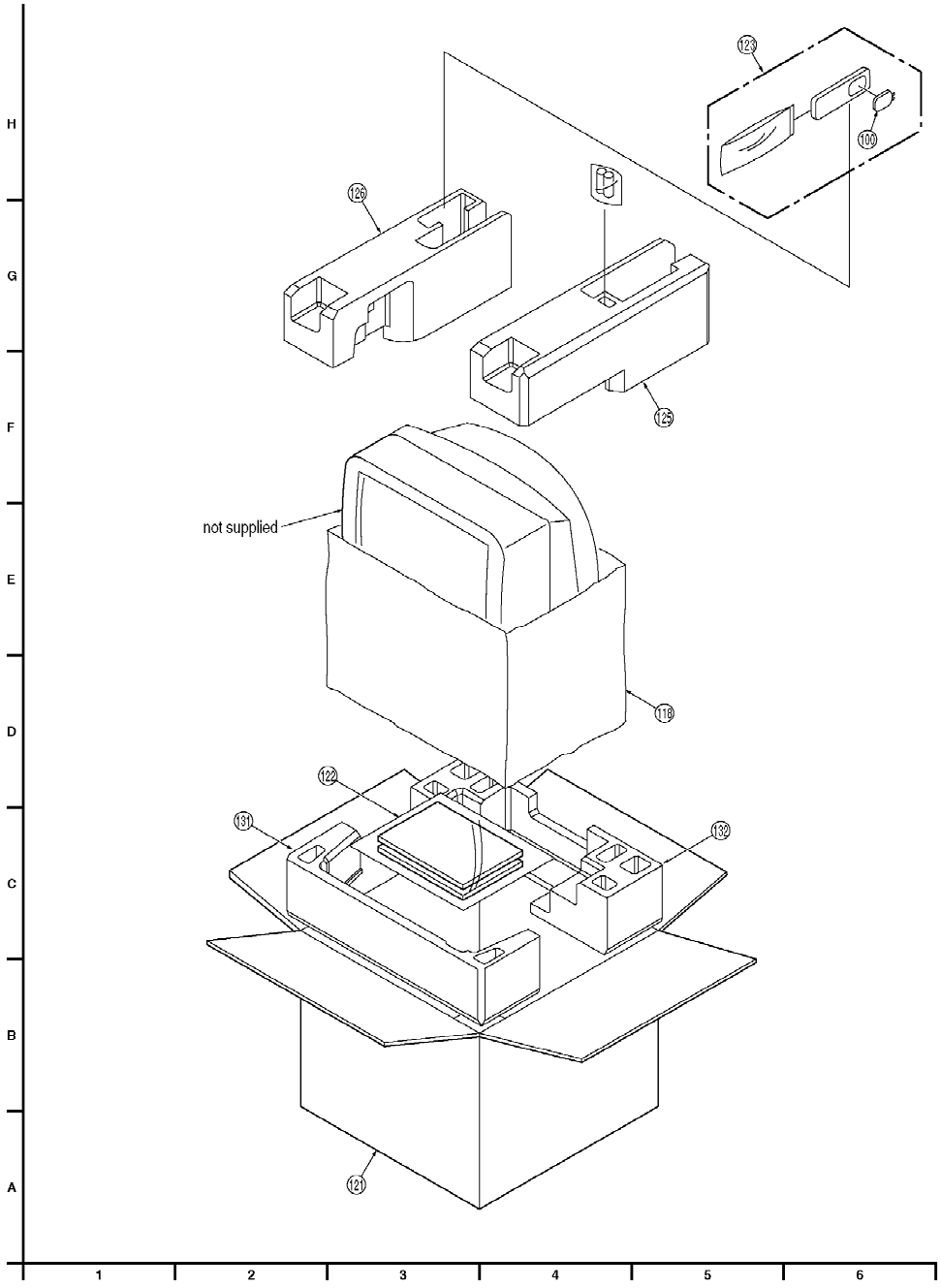

12. REPLACEMENT PARTS LISTS

BEFORE REPLACING PARTS, READ THE FOLLOWING:

12.1. REPLACEMENT NOTES

12.1.1. General Notes

1. Use only original replacement parts:

To maintain original function and reliability of repaired units, use

only original replacement parts which are listed with their part numbers in the parts list.

2. IMPORTANT SAFETY NOTICE
   Components identified by the sign ⚠ have special characteristics important for safety. When replacing any of these components, use only the specified parts.
3. SPECIAL NOTE
   All integrated circuits and many other semiconductor devices are electrostatically sensitive and therefore require the special handling techniques described under the "ELECTROSTATICALLY SENSITIVE (ES) DEVICES" section of this service manual.
4. Parts with no Ref. No. in "EXPLODED VIEWS" are not supplied. And some Ref. No. will be skipped. Be sure to make your orders of replacement parts according to the parts list.
   "<R>" in Remarks column indicates recommended parts.
   "<M>" in Remarks column indicates needed in the periodical maintenance.
5. Parts different in shape or size may be used. However, only interchangeable parts will be supplied as service replacement parts.
6. Parts with mark “AVC” in Remarks column are supplied from AVC. Others are supplied from MKA.
7. Item numbers with capital letter E (Example: E10, E20,...) in the Ref. No. column are shown in the exploded views.
8. Parts whose Ref. Nos. are the same are interchangeable as replacement parts. Any of these parts may be ordered and used as a replacement part.

12.1.2. Mechanical Replacement Notes

1. Section No. of parts shown in Exploded Views are indicated in the Remarks column.
2. The Mechanical Chassis Sub Ass'y (Ref. No. 4) consists of all the mechanical parts except the Cylinder Unit (Ref. No. 11) and the Cassette Up Ass'y (Ref. No. 61).
   After replacing the Mechanical Chassis Sub Ass'y, be sure to

perform "TAPE INTERCHANGEABILITY ADJUSTMENT" in MECHANICAL ADJUSTMENT procedures.

3. **In early units, a washer is used.**
   When servicing the washer or the P5 Arm Unit, replace only the P5 Arm Unit with a new one, and remove the washer.
4. **Main Cam Gear is supplied as a Main Cam Gear Kit (Ref. No. 8) only. Main Cam Gear Kit consists of a Main Cam Gear and a Main Cam Push Nut. However, Main Cam Push Nut is available separately as a replacement part.**
5. **The Capstan Motor Ass'y (Ref. No. 46) is supplied as a unit only. However, the Flat Flexible Cable (Ref. No. 45) is available separately as a replacement part.**
6. **The Infrared Remote Control Unit (Ref. No. 123) replacement part is available as a complete assembly unit only. Do not try to disassemble the Infrared Remote Control Unit. However, the battery cover is available separately as a replacement part.**
7. **Main Cam Push Nut (Ref. No. 414) is not reusable.**
   If removed, install a new one.
8. **When replacing the DVD Frame (Ref. No. 317), be sure to place the Rating Label (Ref. No. 318) on it.**

12.1.3. Electrical Replacement Notes

1. **Unless otherwise specified;**
   All resistors are in Ω, K = 1,000 Ω, M = 1,000 kΩ.
2. **Abbreviation**

RTL:
Retention Time Limited
This indicates that the retention time is limited for this item. After the discontinuation of this item in production, it will no longer be available.

NR:
Non Repairable Board Ass'y

MGF CHIP:
Metal Glaze Film Chip

C CHIP:
Ceramic Chip

COMPLX CMP:
Complex Component

W FLMPRF:
Wirewound Flameproof

C.B.A.:
Circuit Board Assembly

P.C.B.:
Printed Circuit Board

E.S.D.:
Electrostatically Sensitive Devices

3. **When replacing 0 Ω resistor, a wire can be substituted for it.**
4. **Since the UHF/VHF TUNER/TV DEMODULATOR UNIT (Ref. No. 743) has already been pre-adjusted at the factory, do not try to adjust the UHF/VHF TUNER/TV DEMODULATOR UNIT. The UHF/ VHF TUNER/TV DEMODULATORUNIT replacement part is available as a complete assembly unit only.**
5. **EEP ROM IC (IC8001), DVD Decoder C.B.A. replacement note: After replacing EEP ROM IC (IC8001) or DVD Decoder C.B.A., confirm the Firmware version of DVD using Self-Diagnostic function. If the version is different than that indicated on the Firmware Disc, update it using the Firmware Disc. Refer to "HOWTO UPDATE THE FIRMWARE OF DVD."**

12.2. MECHANICAL REPLACEMENT PARTS LIST

MECHANICAL REPLACEMENT PARTS

Ref. No.	Part No.	Part Name & Description	Remarks
1	VBSS0033	FULL ERASE HEAD	1
2	LSXK0094	MOTOR BLOCK UNIT	1 <R> <M>
3	LSDB0045	TENSION ARM BOSS	1
4	LSXY0281	MECHANICAL CHASSIS SUB ASS'Y	1,2
5	LSMD0209	OPENER PIECE	1
8	VVGS0009	MAIN CAM GEAR KIT	2 <M>
9	LSDR0004	S REEL TABLE	1 <R> <M>
10	LSDR0005	T REEL TABLE	1 <R> <M>
11	LSEG0030	CYLINDER UNIT	1 <R> <M>
12	VEHS0587	AUDIO CONTROL/ERASE HEAD UNIT	1 <R> <M>
14	LSDG0112	LIFT GEAR	1
16	VXDS0213	LOADING POST BASE-S UNIT	1 <R> <M>
17	VXDS0214	LOADING POST BASE-T UNIT	1 <R> <M>
18	LSXL0079	PINCH ARM UNIT	1 <R> <M>
19	LSDG0110	INTERMEDIATE GEAR A	1
20	LSXL0078	P5 ARM UNIT	1 <R>
21	LSML0131	DRIVE RACK ARM	1
22	LSXL0077	TENSION CONTROL ARM UNIT	1
23	LSSC0518	A/C SHIELD PLATE	1
27	VXLS1130	T BRAKE UNIT	1 <R> <M>
29	VXLS1129	TENSION ARM UNIT	1 <R> <M>
38	LSMB0221	CASSETTE DOOR SPRING	4
41	VXPS0389	CENTER CLUTCH UNIT	2
42	VMBS1151	CHANGING GEAR SPRING	2
43	LSDG0114	CHANGING GEAR	2
44	VXLS1091	IDLER ARM UNIT	2
45	LSJW0027	FLAT FLEXIBLE CABLE W/OUT PLUG,12V DC	2
46	LSEM0056	CAPSTAN MOTOR ASS'Y	2 <R> <M>
47	LSMM0003	MAIN ROD	2
48	LXQVB01279	COLOR PICTURE TUBE UNIT	4 ⚠
49	VXLS1099	S LOADING ARM UNIT	2
50	VXLS1098	T LOADING ARM UNIT	2
51	LSDG0116	REEL GEAR	2
52	LSDG0111	INTERMEDIATE GEAR B	2
53	LSMA0532	SUPPORT ANGLE	2
54	LSDV0009	CAPSTAN BELT SQUARE,ELASTOMER 2MM	2 <R> <M>
58	LSXL0087	SS BRAKE ARM UNIT	2
59	LSMB0196	SS BRAKE SPRING	2
60	VMFS0311	CUSHION	5
61	VXYS1450	CASSETTE UP ASS'Y	3,5 <R>
62	LSMA0352	TOP PLATE	3 <R>
64	LSMD0174	SIDE PLATE L	3
65	LSMD0173	SIDE PLATE R	3
66	LSMB0218	SUPPORT SPRING	3
67	LSML0144	OPENER LEVER	3
68	VXLS1111	DRIVE RACK UNIT	3
69	VXAS4423	HOLDER UNIT	3 <R>
70	VXLS1110	WIPER ARM UNIT	3
71	LXQKY2272R3	FRONT CABINET ASS'Y	4
72	LXQKF3272R3	CASSETTE DOOR-LID UNIT	4 <R>
73	LXQKV01272	REAR COVER UNIT	4
84	LSGU0540	OPERATION BUTTON A	4
90	TBMA008	BADGE,ABS RESIN	4
91	LXQUS01271K	TOP SHIELD PLATE ASS'Y	5

Ref. No.	Part No.	Part Name & Description	Remarks
92	LXQAS3270F	SPEAKER UNIT R	4
93	LXQAS4270F	SPEAKER UNIT L	4
100	VKFS2235	BATTERY COVER	7 <R>
118	LPE64005A	BAG,POLYETHYLENE	7
121	LSPG1393	PACKING CASE,PAPER	7 <R>
122	LSQF0620	FAN BAG	7 <R>
123	LSSQ0302	INFRARED REMOTE CONTROL UNIT	7 <R>
125	LSPN0253	TOP CUSHION RIGHT,STYROFOAM	7 <R>
126	LSPN0252	TOP CUSHION LEFT,STYROFOAM	7 <R>
131	LSPN0254	BOTTOM CUSHION FRONT,STYROFOAM	7 <R>
132	LSPN0255	BOTTOM CUSHION REAR,STYROFOAM	7 <R>
153	TMM7443-1	CLAMPER	6
154	TMM5439-1	CLAMPER	6
200	LSGL0362	PANEL LIGHT	4
201	LSGU0233	OPERATION BUTTON B	4
202	LXQKF4272R3	DVD DISK DOOR-LID UNIT	4
203	LSMB0170	DVD CASSETTE DOOR SPRING	4
204	LSMA0629	DVD MOUNT ANGLE	5
208	TMK77708	CUSHION,RUBBER	4
209	VMFS0213	SHEET,NYLON+RAYON	4
215	LSQL1180	DOLBY DIGITAL CAUTION LABEL	4
230	LSKF0325	TRAY COVER	5
237	LSMA0452	SUPPORT PLATE,STEEL	5
238	LSMA0451	HC SUPPORT ANGLE	5
242	LSXK0088	DVD UNIT	5
266	VEKS5811	GROUNDING WIRE	5
272	TMM77412	CLAMPER	4,5,6
277	KGLS-3S	CLAMPER	5
292	VEKS5830	GROUNDING WIRE	5
293	TMM76455	PURSE LOCK CLAMPER	4,6
316	LSXA0415	LOWER SHIELD ASS'Y	5
317	LMMK0201	DVD FRAME	5
318	LSQL1260	RATING LABEL	5
323	LSMX0153	PCB SPACER	5
401	VHDS0475	SCREW,STEEL	1
405	VHDS0496	SCREW W/WASHER,STEEL	5
410	VHDS0498	SCREW W/WASHER,STEEL	1
414	VHNS0070	MAIN CAM PUSH NUT,STEEL	2
422	XWGV2D5G	WASHER,NYLON	2
424	XYC26+SF6J	SCREW W/WASHER,STEEL	1
426	TMM77532	CUSHION,RUBBER	4
432	XTV3+8JR	TAPPING SCREW,STEEL	5
443	XTV4+12A	TAPPING SCREW,STEEL	4
445	LHT60001Y	SCREW W/WASHER,STEEL	4
446	XTV4+16A	TAPPING SCREW,STEEL	4
449	VHDS0493	TAPPING SCREW,STEEL	5
450	VHDS0309	SCREW,STEEL	5
458	XTV3+8J	TAPPING SCREW,STEEL	1
460	XTN4+12A	TAPPING SCREW,STEEL	5
469	XSN3+6	SCREW,STEEL	5
470	XTV3+10G	TAPPING SCREW,STEEL	4
472	VHDS0297	TAPPING SCREW,STEEL	5
473	XYN26+C6	SCREW W/WASHER,STEEL	1
475	XTV26+5FJ	TAPPING SCREW,STEEL	2

Ref. No.	Part No.	Part Name & Description	Remarks
478	VHDS0495	SCREW,STEEL	2
483	XYN3+F10S	SCREW W/WASHER,STEEL	5,6
484	XTW3+10J	TAPPING SCREW,STEEL	5,6
488	XYN3+F6S	SCREW W/WASHER,STEEL	6
492	VHDS0274	TAPPING SCREW,STEEL	5
508	XTB26+6J	TAPPING SCREW,STEEL	2
510	XTV3+14JR	TAPPING SCREW,STEEL	5
511	XYC26+CF8	SCREW W/WASHER,STEEL	5
711	LSSZ0004	INFRARED RECEIVER UNIT	5
712	VMTS0035	CUSHION,RUBBER	1
713	VMAS1912	P.C.B. SUPPORT ANGLE	6
737	VEKS5836	CONNECTOR CABLE W/PLUG,0V	5
741	LSJA0447	AC CORD W/PLUG,120V	6 ⚠ <R>
742	K3GE1ZB00003	FUSE HOLDER	6
743	ENG36709GL	TUNER,UHF/VHF NR	6
751	LML69001A	ANODE LEAD CLAMPER	6
753	LSSC0256	HEAT SINK	5
759	TUC77627	HEAT SINK	6
760	TUC77628	HEAT SINK	6
762	TUC76649-4	HEAT SINK	6
765	LSSC0254	HEAT SINK	6
771	EYF52BC	FUSE HOLDER	5,6
791	VEKS5773	CONNECTOR CABLE W/PLUG,DC 5V	5
JA	VEKS5824	GROUNDING WIRE	5
E10	LSEP2021A	MAIN C.B.A.	5,6 RTL <R>
E11	VEPS4038A	AUDIO C.B.A.	6 RTL <R>
E20	LSEP2010A	Hi-Fi AUDIO/VIDEO HEAD AMP C.B.A.	1 RTL <R>
E40	LRP61012D	TV MAIN C.B.A.	5,6 RTL <R>
E41	LRP63019D	VERTICAL C.B.A.	6 RTL <R>
E42	LRP63013C	CRT C.B.A.	6 RTL <R>
E50	VEPS1029B	POWER SUPPLY C.B.A.	5 RTL <R>
E60	VEPS4039A	AUDIO AMP C.B.A.	5 RTL <R>
E70	LSEP2022A	OPERATION C.B.A.	5 RTL <R>
E80	LSEP2023A	AUDIO/VIDEO JACK C.B.A.	5 RTL <R>
E90	LSEP2007B	DVD DECODER C.B.A.	5 RTL <R>

SERVICE FIXTURES AND TOOLS

Ref. No.	Part No.	Part Name & Description	Remarks
	VFMS0003H6	VHS ALIGNMENT TAPE	<R>
	VFKS0081	GREASE	
	VFK0329	POST ADJUSTMENT DRIVER	<R>
	VFK27	HEAD CLEANING STICK	<R>
	VFK0330	H-POSITION ADJUSTMENT DRIVER	<R>
	DVDT-S01	DVD TEST DISC	AVC
	LSUA0034	EXTENSION CABLE	

12.3. ELECTRICAL REPLACEMENT PARTS LIST

PRINTED CIRCUIT BOARD ASSEMBLY

Ref. No.	Part No.	Part Name & Description	Remarks
E10	LSEP2021A	MAIN C.B.A.	E.S.D. RTL <R>
E11	VEPS4038A	AUDIO C.B.A.	E.S.D. RTL <R>
E20	LSEP2010A	Hi-Fi AUDIO/VIDEO HEAD AMP C.B.A.	RTL <R>
E40	LRP61012D	TV MAIN C.B.A.	E.S.D. RTL <R>
E41	LRP63019D	VERTICAL C.B.A.	RTL <R>
E42	LRP63013C	CRT C.B.A.	RTL <R>
E50	VEPS1029B	POWER SUPPLY C.B.A.	E.S.D. RTL <R>
E60	VEPS4039A	AUDIO AMP C.B.A.	RTL <R>
E70	LSEP2022A	OPERATION C.B.A.	RTL <R>
E80	LSEP2023A	AUDIO/VIDEO JACK C.B.A.	RTL <R>
E90	LSEP2007B	DVD DECODER C.B.A.	E.S.D. RTL <R>

12.3.1. MAIN C.B.A.

INTEGRATED CIRCUITS

Ref. No.	Part No.	Part Name & Description	Remarks
IC1301	0N3131-R.KT	IC, LINEAR	⚠ <R>
IC1301	0N3131-S.KT	IC, LINEAR	⚠ <R>
IC1302	TA76431ASTP6	IC, LINEAR	<R>
IC1302	B1AZKD000001	IC, LINEAR	<R>
IC1302	C0DAEMZ00001	IC, LINEAR	<R>
IC3001	AN3479FBP-A	IC, LINEAR	<R>
IC3201	MN3885S	IC, CCD 1H DELAY	E.S.D. <R>
IC3301	LC8632165S53	IC, 8BIT MICROCONTROLLER	E.S.D. <R>
IC3302	C1AB00000402	IC, LINEAR	<R>
IC5301	AN5368FB	IC, LINEAR	<R>
IC5351	C1AB00000408	IC, LINEAR	<R>
IC5361	C1AB00000402	IC, LINEAR	<R>
IC6001	MN101D06GCG	IC, 8BIT MICROCONTROLLER	E.S.D. <R>
IC6002	B3NAA0000049	PHOTO INTERRUPUTER	<R>
IC6003	B3NAA0000049	PHOTO INTERRUPUTER	<R>
IC6004	LSSK0004	IC, 1K EEP ROM	E.S.D. <R>
IC6005	C0EBJ0000080	IC, CMOS STANDARD LOGIC	E.S.D. <R>
IC6005	C0EBJ0000099	IC, CMOS STADNARD LOGIC	E.S.D. <R>
IC6005	RN5VS47CA-TR	IC, CMOS STANDARD LOGIC	E.S.D. <R>

TRANSISTORS

Ref. No.	Part No.	Part Name & Description	Remarks
Q1301	2SD1458	TRANSISTOR SI NPN	
Q1301	2SD225900A	TRANSISTOR SI NPN	
Q1302	2SC4559LP.KT	TRANSISTOR SI NPN	⚠
Q1302	2SC4130LF608	TRANSISTOR SI NPN	⚠
Q3001	2SB1218A0L	TRANSISTOR SI PNP CHIP	
Q3001	B1ADCF000063	TRANSISTOR SI PNP CHIP	
Q3002	2SD1819A0L	TRANSISTOR SI NPN CHIP	
Q3002	B1ABCF000020	TRANSISTOR SI NPN CHIP	
Q3004	2SB1218A0L	TRANSISTOR SI PNP CHIP	
Q3004	B1ADCF000063	TRANSISTOR SI PNP CHIP	
Q3301	2SB1218A0L	TRANSISTOR SI PNP CHIP	
Q3301	B1ADCF000063	TRANSISTOR SI PNP CHIP	
Q3305	2SD1819A0L	TRANSISTOR SI NPN CHIP	
Q3305	B1ABCF000020	TRANSISTOR SI NPN CHIP	
Q4001	2SB1218A0L	TRANSISTOR SI PNP CHIP	
Q4001	B1ADCF000063	TRANSISTOR SI PNP CHIP	
Q4002	2SD1819A-RS	TRANSISTOR SI NPN CHIP	
Q4003	2SD1819A-RS	TRANSISTOR SI NPN CHIP	
Q4101	2SD0601A0L	TRANSISTOR SI NPN CHIP	
Q4101	B1ABCF000011	TRANSISTOR SI NPN CHIP	
Q4171	2SD1819A0L	TRANSISTOR SI NPN CHIP	
Q4171	B1ABCF000020	TRANSISTOR SI NPN CHIP	
Q5301	2SD0601A0L	TRANSISTOR SI NPN CHIP	
Q5301	B1ABCF000011	TRANSISTOR SI NPN CHIP	
Q5302	2SD0601A0L	TRANSISTOR SI NPN CHIP	
Q5302	B1ABCF000011	TRANSISTOR SI NPN CHIP	
Q5901	2SD225900A	TRANSISTOR SI NPN	
Q5901	2SD1858-RTV2	TRANSISTOR SI NPN	
Q6001	2SB0709A0L	TRANSISTOR SI PNP CHIP	
Q6001	B1ADCF000001	TRANSISTOR SI PNP CHIP	
Q6002	2SD0601A0L	TRANSISTOR SI NPN CHIP	
Q6002	B1ABCF000011	TRANSISTOR SI NPN CHIP	
Q6003	2SD0601A0L	TRANSISTOR SI NPN CHIP	
Q6003	B1ABCF000011	TRANSISTOR SI NPN CHIP	
Q6004	2SB0709A0L	TRANSISTOR SI PNP CHIP	
Q6004	B1ADCF000001	TRANSISTOR SI PNP CHIP	
Q6005	2SB0709A0L	TRANSISTOR SI PNP CHIP	
Q6005	B1ADCF000001	TRANSISTOR SI PNP CHIP	
Q6006	2SD0601A0L	TRANSISTOR SI NPN CHIP	
Q6006	B1ABCF000011	TRANSISTOR SI NPN CHIP	
Q6009	VEKS5707	PHOTO SENSOR UNIT	
Q6010	VEKS5707	PHOTO SENSOR UNIT	

DIODES

Ref. No.	Part No.	Part Name & Description	Remarks
D1301	DB105G	DIODE SI	⚠
D1301	B0EBKR000003	DIODE SI	⚠
D1301	B0EBKR000020	DIODE SI	⚠
D1302	B0HAHP000014	DIODE SI	
D1302	B0HAJP000007	DIODE SI	
D1302	B0HAMP000061	DIODE SI	
D1303	MA2C165001VT	DIODE SI	
D1303	B0AACK000004	DIODE SI	
D1303	1SS119	DIODE SI	
D1304	B0HAHP000014	DIODE SI	
D1304	B0HAJP000007	DIODE SI	
D1304	B0HAMP000061	DIODE SI	
D1305	ERB32-01L3	DIODE SI	
D1305	B0HAML000013	DIODE SI	
D1305	B0HAML000014	DIODE SI	
D1305	RGP15GL-5008	DIODE SI	
D1306	MA2270LA	DIODE ZENER 27V	⚠
D4171	MA2C165001VT	DIODE SI	
D4171	B0AACK000004	DIODE SI	
D4171	1SS119	DIODE SI	
D5304	MA2C165001VT	DIODE SI	
D5304	B0AACK000004	DIODE SI	
D5304	1SS119	DIODE SI	
D5501	MA4062-L	DIODE ZENER 6.2V	⚠
D6001	VEKS5708	SENSOR LED UNIT	
D6003	MA2C165001VT	DIODE SI	
D6003	B0AACK000004	DIODE SI	
D6003	1SS119	DIODE SI	
D6005	MA2C165001VT	DIODE SI	
D6005	B0AACK000004	DIODE SI	
D6005	1SS119	DIODE SI	

RESISTORS

Ref. No.	Part No.	Part Name & Description	Remarks
R1301	ERDS2TJ332	CARBON 1/4W 3.3K	
R1302	D0AF334JA038	CARBON 1/2W 330K	
R1303	ERG1SJ560P	METAL OXIDE 1W 56	
R1304	ERG2SJ333H	METAL OXIDE 2W 33K	
R1305	ERJ6GEYJ222V	MGF CHIP 1/10W 2.2K	
R1306	D0AF150JA038	CARBON 1/2W 15	
R1307	ERDS2TJ101	CARBON 1/4W 100	
R1308	ERJ6GEYJ821V	MGF CHIP 1/10W 820	
R1309	ERJ6GEYJ222V	MGF CHIP 1/10W 2.2K	
R1310	ERJ6GEYJ102V	MGF CHIP 1/10W 1K	
R1311	ERJ6ENF1542V	MGF CHIP 1/10W 15.4K	
R1312	ERJ6ENF2001V	MGF CHIP 1/10W 2K	
R3001	ERJ6GEYJ101V	MGF CHIP 1/10W 100	
R3006	ERJ6GEYJ101V	MGF CHIP 1/10W 100	
R3010	ERJ6GEYJ103V	MGF CHIP 1/10W 10K	
R3016	ERJ6GEYJ121V	MGF CHIP 1/10W 120	
R3017	ERJ6GEYJ331V	MGF CHIP 1/10W 330	
R3024	ERJ6GEYJ391V	MGF CHIP 1/10W 390	
R3025	ERJ6GEYJ125V	MGF CHIP 1/10W 1.2M	
R3026	ERJ6GEYJ474V	MGF CHIP 1/10W 470K	
R3028	ERJ6GEYJ272V	MGF CHIP 1/10W 2.7K	
R3029	ERJ6GEYJ151V	MGF CHIP 1/10W 150	
R3032	ERJ6GEYJ122V	MGF CHIP 1/10W 1.2K	
R3035	ERJ6GEYJ103V	MGF CHIP 1/10W 10K	
R3036	ERJ6GEYJ102V	MGF CHIP 1/10W 1K	
R3037	ERJ6GEYJ102V	MGF CHIP 1/10W 1K	
R3038	ERJ6GEYJ222V	MGF CHIP 1/10W 2.2K	
R3077	ERJ6GEYJ101V	MGF CHIP 1/10W 100	
R3078	ERJ6GEYJ222V	MGF CHIP 1/10W 2.2K	
R3079	ERJ6GEYJ102V	MGF CHIP 1/10W 1K	
R3080	ERJ6GEYJ102V	MGF CHIP 1/10W 1K	
R3083	ERJ6GEYJ221V	MGF CHIP 1/10W 220	
R3084	ERJ6GEYJ102V	MGF CHIP 1/10W 1K	
R3301	ERJ6GEYJ181V	MGF CHIP 1/10W 180	
R3302	ERJ6GEYJ102V	MGF CHIP 1/10W 1K	
R3303	ERJ6GEYJ103V	MGF CHIP 1/10W 10K	
R3304	ERJ6GEYJ101V	MGF CHIP 1/10W 100	
R3305	ERJ6GEYJ102V	MGF CHIP 1/10W 1K	
R3308	ERJ6GEYJ103V	MGF CHIP 1/10W 10K	
R3309	ERJ6GEYJ103V	MGF CHIP 1/10W 10K	
R3310	ERJ6GEYJ394V	MGF CHIP 1/10W 390K	
R3312	ERJ6GEYJ223V	MGF CHIP 1/10W 22K	
R3313	ERJ6GEYJ105V	MGF CHIP 1/10W 1M	
R3314	ERJ6GEYJ182V	MGF CHIP 1/10W 1.8K	
R3315	ERJ6GEYJ221V	MGF CHIP 1/10W 220	
R3316	ERJ6GEYJ331V	MGF CHIP 1/10W 330	
R3318	ERJ6GEYJ102V	MGF CHIP 1/10W 1K	
R3319	ERJ6GEYJ102V	MGF CHIP 1/10W 1K	
R3320	ERJ6GEYJ102V	MGF CHIP 1/10W 1K	
R3321	ERJ6GEYJ101V	MGF CHIP 1/10W 100	
R3324	ERJ6GEYJ471V	MGF CHIP 1/10W 470	
R3325	ERJ6GEYJ471V	MGF CHIP 1/10W 470	
R3327	ERJ6GEYJ471V	MGF CHIP 1/10W 470	
R3331	ERJ6GEYJ222V	MGF CHIP 1/10W 2.2K	

Ref. No.	Part No.	Part Name & Description	Remarks
R3332	J0JBC0000022	BEAD INDUCTOR CHIP	
R3333	J0JBC0000022	BEAD INDUCTOR CHIP	
R3334	J0JBC0000022	BEAD INDUCTOR CHIP	
R3341	ERJ6GEYJ103V	MGF CHIP 1/10W 10K	
R3343	ERJ6GEYJ562V	MGF CHIP 1/10W 5.6K	
R3344	ERJ6GEY0R00V	MGF CHIP 1/10W 0	
R3345	ERJ6GEY0R00V	MGF CHIP 1/10W 0	
R3346	ERJ6GEY0R00V	MGF CHIP 1/10W 0	
R3347	ERJ6GEYJ153V	MGF CHIP 1/10W 15K	
R3349	ERJ6GEYJ563V	MGF CHIP 1/10W 56K	
R4001	ERJ6GEYJ103V	MGF CHIP 1/10W 10K	
R4002	ERJ6GEYJ334V	MGF CHIP 1/10W 330K	
R4003	ERJ6GEYJ221V	MGF CHIP 1/10W 220	
R4004	ERJ6GEYJ333V	MGF CHIP 1/10W 33K	
R4005	ERJ6GEYJ225V	MGF CHIP 1/10W 2.2M	
R4006	ERJ6GEYJ681V	MGF CHIP 1/10W 680	
R4007	ERJ6GEYJ821V	MGF CHIP 1/10W 820	
R4008	ERJ6GEYJ273V	MGF CHIP 1/10W 27K	
R4009	ERJ6GEYJ473V	MGF CHIP 1/10W 47K	
R4010	ERJ6GEYJ103V	MGF CHIP 1/10W 10K	
R4011	ERJ6GEYJ682V	MGF CHIP 1/10W 6.8K	
R4012	ERJ6GEYJ682V	MGF CHIP 1/10W 6.8K	
R4014	ERJ6GEYJ472V	MGF CHIP 1/10W 4.7K	
R4015	ERJ6GEYJ222V	MGF CHIP 1/10W 2.2K	
R4031	ERJ6GEYJ333V	MGF CHIP 1/10W 33K	
R4032	ERJ6GEYJ223V	MGF CHIP 1/10W 22K	
R4051	ERJ6GEYJ393V	MGF CHIP 1/10W 39K	
R4052	ERJ6GEYJ561V	MGF CHIP 1/10W 560	
R4101	ERJ6GEYJ563V	MGF CHIP 1/10W 56K	
R4102	ERJ6GEYJ184V	MGF CHIP 1/10W 180K	
R4103	ERJ6GEYJ153V	MGF CHIP 1/10W 15K	
R4172	ERJ6GEYJ102V	MGF CHIP 1/10W 1K	
R4175	ERJ6GEYJ102V	MGF CHIP 1/10W 1K	
R5301	ERJ6GEYJ221V	MGF CHIP 1/10W 220	
R5302	ERJ6GEYJ223V	MGF CHIP 1/10W 22K	
R5303	ERJ6GEYJ472V	MGF CHIP 1/10W 4.7K	
R5304	ERJ6GEYJ393V	MGF CHIP 1/10W 39K	
R5305	ERJ6GEYJ224V	MGF CHIP 1/10W 220K	
R5306	ERJ6GEYJ223V	MGF CHIP 1/10W 22K	
R5307	ERJ6GEY0R00V	MGF CHIP 1/10W 0	
R5308	ERJ6GEYJ393V	MGF CHIP 1/10W 39K	
R5309	ERJ6GEYJ184V	MGF CHIP 1/10W 180K	
R5311	ERJ6GEYJ331V	MGF CHIP 1/10W 330	
R5312	ERJ6GEYJ331V	MGF CHIP 1/10W 330	
R5313	ERJ6GEYJ331V	MGF CHIP 1/10W 330	
R5314	ERJ6GEYJ222V	MGF CHIP 1/10W 2.2K	
R5315	ERJ6GEYJ222V	MGF CHIP 1/10W 2.2K	
R5316	ERJ6GEYJ222V	MGF CHIP 1/10W 2.2K	
R5317	ERJ6GEYJ101V	MGF CHIP 1/10W 100	
R5318	ERJ6GEY0R00V	MGF CHIP 1/10W 0	
R5322	ERJ6GEY0R00V	MGF CHIP 1/10W 0	
R5324	ERJ6GEYJ101V	MGF CHIP 1/10W 100	
R5326	ERJ6GEY0R00V	MGF CHIP 1/10W 0	
R5351	ERJ6GEYJ101V	MGF CHIP 1/10W 100	

Ref. No.	Part No.	Part Name & Description	Remarks
R5361	ERJ6GEYJ101V	MGF CHIP 1/10W 100	
R5401	ERJ6GEYJ561V	MGF CHIP 1/10W 560	
R5402	ERJ6GEYJ394V	MGF CHIP 1/10W 390K	
R5403	ERJ6GEYJ221V	MGF CHIP 1/10W 220	
R5405	ERJ6GEYJ822V	MGF CHIP 1/10W 8.2K	
R5406	ERJ6GEYJ101V	MGF CHIP 1/10W 100	
R5407	ERJ6GEYJ101V	MGF CHIP 1/10W 100	
R5501	ERJ6GEYJ471V	MGF CHIP 1/10W 470	
R5502	ERJ6GEYJ394V	MGF CHIP 1/10W 390K	
R5503	ERDS2TJ471	CARBON 1/4W 470	
R5504	ERJ6GEYJ101V	MGF CHIP 1/10W 100	
R5505	ERJ6ENF3241V	MGF CHIP 1/10W 3.24K	⚠
R5506	ERJ6GEYJ473V	MGF CHIP 1/10W 47K	
R5508	ERJ6GEYJ561V	MGF CHIP 1/10W 560	
R5510	ERJ6GEYJ101V	MGF CHIP 1/10W 100	
R5511	ERJ6GEYJ222V	MGF CHIP 1/10W 2.2K	
R5512	ERJ6GEYJ151V	MGF CHIP 1/10W 150	
R5513	ERJ6GEYJ101V	MGF CHIP 1/10W 100	
R5515	ERJ6GEYJ272V	MGF CHIP 1/10W 2.7K	
R5604	ERJ6GEYJ332V	MGF CHIP 1/10W 3.3K	
R5902	ERJ6GEYJ102V	MGF CHIP 1/10W 1K	
R5932	ERJ6GEYJ101V	MGF CHIP 1/10W 100	
R5933	ERJ6GEYJ101V	MGF CHIP 1/10W 100	
R6001	ERJ6GEYJ103V	MGF CHIP 1/10W 10K	
R6002	ERJ6GEYJ103V	MGF CHIP 1/10W 10K	
R6003	ERJ6GEYJ102V	MGF CHIP 1/10W 1K	
R6004	ERJ6GEYJ102V	MGF CHIP 1/10W 1K	
R6005	ERJ6GEYJ103V	MGF CHIP 1/10W 10K	
R6006	ERJ6GEYJ222V	MGF CHIP 1/10W 2.2K	
R6007	ERJ6GEYJ221V	MGF CHIP 1/10W 220	
R6008	ERJ6GEYJ102V	MGF CHIP 1/10W 1K	
R6009	ERJ6GEYJ102V	MGF CHIP 1/10W 1K	
R6011	ERJ6GEYJ561V	MGF CHIP 1/10W 560	
R6012	ERJ6GEYJ561V	MGF CHIP 1/10W 560	
R6013	ERJ6GEYJ102V	MGF CHIP 1/10W 1K	
R6014	ERJ6GEYJ102V	MGF CHIP 1/10W 1K	
R6015	ERJ6GEYJ101V	MGF CHIP 1/10W 100	
R6016	ERJ6GEYJ101V	MGF CHIP 1/10W 100	
R6017	ERJ6GEYJ101V	MGF CHIP 1/10W 100	
R6018	ERJ6GEYJ101V	MGF CHIP 1/10W 100	
R6019	ERJ6GEYJ153V	MGF CHIP 1/10W 15K	
R6021	ERJ6GEYJ102V	MGF CHIP 1/10W 1K	
R6022	ERJ6GEYJ332V	MGF CHIP 1/10W 3.3K	
R6023	ERJ6GEYJ221V	MGF CHIP 1/10W 220	
R6024	ERJ6GEYJ101V	MGF CHIP 1/10W 100	
R6025	ERJ6GEY0R00V	MGF CHIP 1/10W 0	
R6027	ERJ6GEYJ221V	MGF CHIP 1/10W 220	
R6028	ERJ6GEYJ472V	MGF CHIP 1/10W 4.7K	
R6029	ERJ6GEYJ102V	MGF CHIP 1/10W 1K	
R6030	ERJ6GEYJ102V	MGF CHIP 1/10W 1K	
R6035	ERJ6GEYJ102V	MGF CHIP 1/10W 1K	
R6040	ERJ6GEYJ101V	MGF CHIP 1/10W 100	
R6041	ERJ6GEYJ102V	MGF CHIP 1/10W 1K	
R6042	ERJ6GEYJ103V	MGF CHIP 1/10W 10K	

Ref. No.	Part No.	Part Name & Description	Remarks
R6043	ERJ6GEYJ102V	MGF CHIP 1/10W 1K	
R6044	ERJ6GEYJ102V	MGF CHIP 1/10W 1K	
R6045	ERJ6GEYJ102V	MGF CHIP 1/10W 1K	
R6046	ERJ6GEYJ102V	MGF CHIP 1/10W 1K	
R6049	ERJ6GEYJ102V	MGF CHIP 1/10W 1K	
R6050	ERJ6GEYJ102V	MGF CHIP 1/10W 1K	
R6052	ERJ6GEYJ102V	MGF CHIP 1/10W 1K	
R6053	ERJ6GEYJ222V	MGF CHIP 1/10W 2.2K	
R6054	ERJ6GEYJ102V	MGF CHIP 1/10W 1K	
R6055	ERJ6GEYJ101V	MGF CHIP 1/10W 100	
R6056	ERJ6GEYJ102V	MGF CHIP 1/10W 1K	
R6057	ERJ6GEYJ102V	MGF CHIP 1/10W 1K	
R6058	ERJ6GEYJ102V	MGF CHIP 1/10W 1K	
R6059	ERJ6GEYJ222V	MGF CHIP 1/10W 2.2K	
R6060	ERJ6GEYJ102V	MGF CHIP 1/10W 1K	
R6061	ERJ6GEYJ101V	MGF CHIP 1/10W 100	
R6062	ERJ6GEYJ101V	MGF CHIP 1/10W 100	
R6063	ERJ6GEYJ101V	MGF CHIP 1/10W 100	
R6064	ERJ6GEYJ103V	MGF CHIP 1/10W 10K	
R6066	ERJ6GEYJ102V	MGF CHIP 1/10W 1K	
R6067	ERJ6GEYJ102V	MGF CHIP 1/10W 1K	
R6077	ERJ6GEYJ103V	MGF CHIP 1/10W 10K	
R6078	ERJ6GEYJ102V	MGF CHIP 1/10W 1K	
R6080	ERJ6GEYJ122V	MGF CHIP 1/10W 1.2K	
R6081	ERJ6GEYJ122V	MGF CHIP 1/10W 1.2K	
R6082	ERJ6GEYJ103V	MGF CHIP 1/10W 10K	
R6090	ERJ6GEYJ102V	MGF CHIP 1/10W 1K	
R6093	ERJ6GEYJ102V	MGF CHIP 1/10W 1K	
R6094	ERJ6GEYJ102V	MGF CHIP 1/10W 1K	
R6098	ERJ6GEYJ153V	MGF CHIP 1/10W 15K	
R6099	ERJ6GEYJ153V	MGF CHIP 1/10W 15K	
R6100	ERJ6GEYJ153V	MGF CHIP 1/10W 15K	
R6113	ERJ6GEYJ472V	MGF CHIP 1/10W 4.7K	
R6114	ERJ6GEYJ272V	MGF CHIP 1/10W 2.7K	
R6115	ERJ6GEYJ103V	MGF CHIP 1/10W 10K	
R6116	ERDS2TJ101	CARBON 1/4W 100	
R6118	ERJ6GEYJ104V	MGF CHIP 1/10W 100K	
R6119	ERJ6GEYJ223V	MGF CHIP 1/10W 22K	
R6120	ERJ6GEYJ104V	MGF CHIP 1/10W 100K	
R6121	ERJ6GEYJ473V	MGF CHIP 1/10W 47K	
R6122	ERJ6GEYJ181V	MGF CHIP 1/10W 180	
R6123	ERJ6GEYJ473V	MGF CHIP 1/10W 47K	
R6124	ERJ6GEYJ103V	MGF CHIP 1/10W 10K	
R6126	ERJ6GEYJ221V	MGF CHIP 1/10W 220	
R6127	ERJ6GEYJ221V	MGF CHIP 1/10W 220	
R6130	ERJ6GEYJ223V	MGF CHIP 1/10W 22K	
R6131	ERJ6GEYJ183V	MGF CHIP 1/10W 18K	
R6132	ERJ6GEYJ391V	MGF CHIP 1/10W 390	
R6133	ERJ6GEYJ103V	MGF CHIP 1/10W 10K	
R6134	ERJ6GEYJ103V	MGF CHIP 1/10W 10K	
R6135	ERJ6GEYJ475V	MGF CHIP 1/10W 4.7M	
R6136	ERJ6GEYJ332V	MGF CHIP 1/10W 3.3K	
R6137	ERJ6GEYJ182V	MGF CHIP 1/10W 1.8K	
R6138	ERDS2TJ560T	CARBON 1/4W 56	

Ref. No.	Part No.	Part Name & Description	Remarks
R6143	ERJ6GEYJ223V	MGF CHIP 1/10W 22K	
R6144	ERJ6GEYJ222V	MGF CHIP 1/10W 2.2K	
R6160	ERJ6GEYJ562V	MGF CHIP 1/10W 5.6K	
R6161	ERJ6GEYJ562V	MGF CHIP 1/10W 5.6K	
R6162	ERJ6GEYJ562V	MGF CHIP 1/10W 5.6K	
R6163	ERJ6GEYJ562V	MGF CHIP 1/10W 5.6K	
R6164	ERJ6GEYJ472V	MGF CHIP 1/10W 4.7K	
R6165	ERJ6GEYJ472V	MGF CHIP 1/10W 4.7K	
R6166	ERJ6GEYJ223V	MGF CHIP 1/10W 22K	
R6167	ERJ6GEYJ562V	MGF CHIP 1/10W 5.6K	
R6170	ERJ6GEYJ102V	MGF CHIP 1/10W 1K	
R6171	ERJ6GEYJ562V	MGF CHIP 1/10W 5.6K	
R6201	ERJ6GEYJ103V	MGF CHIP 1/10W 10K	
R6202	ERJ6GEYJ473V	MGF CHIP 1/10W 47K	
R6203	ERJ6GEYJ274V	MGF CHIP 1/10W 270K	
R6204	ERJ6GEYJ184V	MGF CHIP 1/10W 180K	
R6205	ERJ6GEYJ103V	MGF CHIP 1/10W 10K	
R6207	ERJ6GEYJ101V	MGF CHIP 1/10W 100	
R6208	ERJ6GEYJ152V	MGF CHIP 1/10W 1.5K	
R6209	ERJ6GEYJ222V	MGF CHIP 1/10W 2.2K	
R6210	ERJ6GEYJ563V	MGF CHIP 1/10W 56K	
R6211	ERJ6GEYJ153V	MGF CHIP 1/10W 15K	
R6212	ERJ6GEYJ682V	MGF CHIP 1/10W 6.8K	
R6301	ERJ6GEYJ182V	MGF CHIP 1/10W 1.8K	
R6302	ERJ6GEYJ392V	MGF CHIP 1/10W 3.9K	
R6303	ERJ6GEYJ182V	MGF CHIP 1/10W 1.8K	
R6305	ERJ6GEYJ182V	MGF CHIP 1/10W 1.8K	
R6306	ERJ6GEYJ392V	MGF CHIP 1/10W 3.9K	
R6307	ERJ6GEYJ182V	MGF CHIP 1/10W 1.8K	
R6308	ERJ6GEYJ392V	MGF CHIP 1/10W 3.9K	
R6309	ERJ6GEYJ123V	MGF CHIP 1/10W 12K	

CAPACITORS

Ref. No.	Part No.	Part Name & Description	Remarks
C1301	F1B2E101A009	CERAMIC 250V 100PF	⚠
C1301	F1B2E101A008	CERAMIC 250V 100PF	⚠
C1301	F1B2E101A032	CERAMIC 250V 100PF	⚠
C1301	F1B2E101A037	CERAMIC 250V 100PF	⚠
C1302	F1B2E102A012	CERAMIC 250V 1000PF	⚠
C1302	F1B2E102A011	CERAMIC 250V 1000PF	⚠
C1302	F1B2E102A044	CERAMIC 250V 1000PF	⚠
C1302	F1B2E102A045	CERAMIC 250V 1000PF	⚠
C1302	F1B2E1020005	CERAMIC 250V 1000PF	⚠
C1302	F1B2E1020006	CERAMIC 250V 1000PF	⚠
C1307	VCYSBRE183KX	CERAMIC 25V 0.018UF	
C1308	ECEA2DU820YE	ELECTROLYTIC 200V 82UF	⚠
C1308	F2A2D8200001	ELECTROLYTIC 200V 82UF	⚠
C1308	F2A2D8200003	ELECTROLYTIC 200V 82UF	⚠
C1308	VCESR2D820XE	ELECTROLYTIC 200V 82UF	⚠
C1309	ECKR2H221KB5	CERAMIC 500V 220PF	
C1310	ECJ2VB1E104K	C CHIP 25V 0.1UF	
C1311	VCYSBRE183KX	CERAMIC 25V 0.018UF	
C1312	ECA2DHG4R7B	ELECTROLYTIC 200V 4.7UF	
C1313	ECJ2VB1H102K	C CHIP 50V 1000PF	
C1314	ECA1VM102	ELECTROLYTIC 35V 1000UF	
C1315	ECJ2VB1E104K	C CHIP 25V 0.1UF	
C1316	ECA1VM102	ELECTROLYTIC 35V 1000UF	
C3002	ECJ2VC1H020C	C CHIP 50V 2PF	
C3003	ECJ2VF1E104Z	C CHIP 25V 0.1UF	
C3004	ECJ2VF1H103Z	C CHIP 50V 0.01UF	
C3006	ECJ2VF1E104Z	C CHIP 25V 0.1UF	
C3007	ECEA0JKA101	ELECTROLYTIC 6.3V 100UF	
C3008	ECJ2VC1H181J	C CHIP 50V 180PF	
C3009	ECEA1EKA4R7	ELECTROLYTIC 25V 4.7UF	
C3010	ECJ2VF1H103Z	C CHIP 50V 0.01UF	
C3013	ECJ2VF1C224Z	C CHIP 16V 0.22UF	
C3015	ECEA0JKA470	ELECTROLYTIC 6.3V 47UF	
C3016	ECEA1CKS100	ELECTROLYTIC 16V 10UF	
C3018	ECEA0JKS101	ELECTROLYTIC 6.3V 100UF	
C3019	ECEA1HKA2R2	ELECTROLYTIC 50V 2.2UF	
C3020	ECEA1CKA220	ELECTROLYTIC 16V 22UF	
C3022	ECJ2VF1C224Z	C CHIP 16V 0.22UF	
C3023	ECJ2VC1H680J	C CHIP 50V 68PF	
C3024	ECJ2VF1E104Z	C CHIP 25V 0.1UF	
C3025	ECJ2VB1C104K	C CHIP 16V 0.1UF	
C3026	ECJ2VB1H822K	C CHIP 50V 8200PF	
C3027	ECJ2VF1H103Z	C CHIP 50V 0.01UF	
C3028	ECEA1HKA2R2	ELECTROLYTIC 50V 2.2UF	
C3030	ECJ2VF1H103Z	C CHIP 50V 0.01UF	
C3031	ECJ2VF1E104Z	C CHIP 25V 0.1UF	
C3032	ECJ2VF1C474Z	C CHIP 16V 0.47UF	
C3034	ECJ2VC1H181J	C CHIP 50V 180PF	
C3035	ECJ2VC1H330J	C CHIP 50V 33PF	
C3036	ECJ2VF1E104Z	C CHIP 25V 0.1UF	
C3037	ECEA0JKA101	ELECTROLYTIC 6.3V 100UF	
C3038	ECEA1CKA100	ELECTROLYTIC 16V 10UF	

Ref. No.	Part No.	Part Name & Description	Remarks
C3041	ECJ2VF1H103Z	C CHIP 50V 0.01UF	
C3043	ECJ2VB1H392K	C CHIP 50V 3900PF	
C3044	ECJ2VF1H103Z	C CHIP 50V 0.01UF	
C3045	ECEA1HKAR47	ELECTROLYTIC 50V 0.47UF	
C3046	ECEA1HKA2R2	ELECTROLYTIC 50V 2.2UF	
C3047	ECEA0JKA101	ELECTROLYTIC 6.3V 100UF	
C3048	ECJ2VF1E104Z	C CHIP 25V 0.1UF	
C3050	ECEA1HKA2R2	ELECTROLYTIC 50V 2.2UF	
C3055	ECJ2VF1E104Z	C CHIP 25V 0.1UF	
C3056	ECJ2VF1E104Z	C CHIP 25V 0.1UF	
C3057	ECJ2VF1E104Z	C CHIP 25V 0.1UF	
C3058	ECJ2VF1H103Z	C CHIP 50V 0.01UF	
C3083	ECJ2VB1H152K	C CHIP 50V 1500PF	
C3084	ECJ2VF1H103Z	C CHIP 50V 0.01UF	
C3231	ECEA1HKA010	ELECTROLYTIC 50V 1UF	
C3232	ECJ2VB1H102K	C CHIP 50V 1000PF	
C3234	ECEA0JKA470	ELECTROLYTIC 6.3V 47UF	
C3235	ECJ2VF1H103Z	C CHIP 50V 0.01UF	
C3236	ECJ2VF1E104Z	C CHIP 25V 0.1UF	
C3237	ECJ2VF1H103Z	C CHIP 50V 0.01UF	
C3303	ECJ2VC1H220J	C CHIP 50V 22PF	
C3304	ECEA1CKA100	ELECTROLYTIC 16V 10UF	
C3305	ECEA1CKA100	ELECTROLYTIC 16V 10UF	
C3306	ECEA0JKA221	ELECTROLYTIC 6.3V 220UF	
C3307	ECJ2VF1H103Z	C CHIP 50V 0.01UF	
C3308	ECJ2VF1E104Z	C CHIP 25V 0.1UF	
C3309	ECJ2VC1H220J	C CHIP 50V 22PF	
C3310	ECJ2VF1E104Z	C CHIP 25V 0.1UF	
C3311	ECJ2VC1H180J	C CHIP 50V 18PF	
C3313	ECEA1HKA2R2	ELECTROLYTIC 50V 2.2UF	
C3315	ECJ2VB1H102K	C CHIP 50V 1000PF	
C3316	ECJ2VB1H333K	C CHIP 50V 0.033UF	
C3317	ECEA1HKS010	ELECTROLYTIC 50V 1UF	
C4001	ECJ2VF1C224Z	C CHIP 16V 0.22UF	
C4002	ECEA1HKS010	ELECTROLYTIC 50V 1UF	
C4003	ECJ2VB1H272K	C CHIP 50V 2700PF	
C4004	ECJ2VB1H103K	C CHIP 50V 0.01UF	
C4005	ECEA0JKS220	ELECTROLYTIC 6.3V 22UF	
C4006	ECJ2VB1H102K	C CHIP 50V 1000PF	
C4007	ECEA0JKA220	ELECTROLYTIC 6.3V 22UF	
C4008	ECEA0JKA470	ELECTROLYTIC 6.3V 47UF	
C4009	ECEA1CKA100	ELECTROLYTIC 16V 10UF	
C4010	ECJ2VB1E333K	C CHIP 25V 0.033UF	
C4011	ECJ2VB1H103K	C CHIP 50V 0.01UF	
C4012	ECEA1HKA010	ELECTROLYTIC 50V 1UF	
C4013	ECEA0JKA470	ELECTROLYTIC 6.3V 47UF	
C4014	ECEA1HKA010	ELECTROLYTIC 50V 1UF	
C4051	ECJ2VB1E333K	C CHIP 25V 0.033UF	
C4102	ECQB1562JF3	POLYESTER 100V 5600PF	
C4103	ECJ2VB1H103K	C CHIP 50V 0.01UF	
C4104	ECJ2VB1H103K	C CHIP 50V 0.01UF	
C4105	ECEA1CKA220	ELECTROLYTIC 16V 22UF	
C4171	ECEA1HKA010	ELECTROLYTIC 50V 1UF	
C5301	ECEA1CKN100	ELECTROLYTIC 16V 10UF	

Ref. No.	Part No.	Part Name & Description	Remarks
C5302	ECEA1EKA4R7	ELECTROLYTIC 25V 4.7UF	
C5303	ECEA1HKAR47	ELECTROLYTIC 50V 0.47UF	
C5305	ECEA1HKAR471	ELECTROLYTIC 50V 470UF	
C5306	ECEA1CKA100	ELECTROLYTIC 16V 10UF	
C5307	ECEA1CKA100	ELECTROLYTIC 16V 10UF	
C5308	ECEA1CKA100	ELECTROLYTIC 16V 10UF	
C5351	ECJ2VF1H103Z	C CHIP 50V 0.01UF	
C5352	ECJ2VF1H103Z	C CHIP 50V 0.01UF	
C5353	ECJ2VC1H220J	C CHIP 50V 22PF	
C5354	ECJ2VF1H103Z	C CHIP 50V 0.01UF	
C5361	ECEA1CKA100	ELECTROLYTIC 16V 10UF	
C5362	ECEA1CKA100	ELECTROLYTIC 16V 10UF	
C5363	ECJ2VC1H220J	C CHIP 50V 22PF	
C5364	ECJ2VF1E104Z	C CHIP 25V 0.1UF	
C5401	VCUSTBC224KB	C CHIP 16V 0.22UF	
C5402	ECJ2VB1H222K	C CHIP 50V 2200PF	
C5403	ECEA1HKA2R2	ELECTROLYTIC 50V 2.2UF	
C5501	ECJ2VB1E183K	C CHIP 25V 0.018UF	
C5502	ECJ2VB1H681K	C CHIP 50V 680PF	
C5505	ECEA1CKA470	ELECTROLYTIC 16V 47UF	
C5506	ECJ2VF1H103Z	C CHIP 50V 0.01UF	
C5507	ECEA1CKA100	ELECTROLYTIC 16V 10UF	
C5508	ECUV1H221JSN	C CHIP 50V 220PF	
C5510	ECEA1HKA010	ELECTROLYTIC 50V 1UF	
C5511	ECJ2VB1E333K	C CHIP 25V 0.033UF	
C5516	ECJ2VB1E333K	C CHIP 25V 0.033UF	
C5601	ECJ2VF1H103Z	C CHIP 50V 0.01UF	
C5602	ECJ2VB1E104K	C CHIP 25V 0.1UF	
C5603	ECJ2VC1H150J	C CHIP 50V 15PF	
C5604	ECEA1HKA010	ELECTROLYTIC 50V 1UF	
C5605	ECJ2VB1E153K	C CHIP 25V 0.015UF	
C5902	ECEA1CKA470	ELECTROLYTIC 16V 47UF	
C5903	ECEA1CKA470	ELECTROLYTIC 16V 47UF	
C5904	ECJ2VF1H103Z	C CHIP 50V 0.01UF	
C5905	ECEA0JKA101	ELECTROLYTIC 6.3V 100UF	
C5906	ECJ2VF1H103Z	C CHIP 50V 0.01UF	
C5932	ECJ2VF1H103Z	C CHIP 50V 0.01UF	
C6001	ECEA0JKA331	ELECTROLYTIC 6.3V 330UF	
C6002	ECJ2VC1H080C	C CHIP 50V 8PF	
C6003	ECJ2VC1H100C	C CHIP 50V 10PF	
C6004	ECJ2VB1E104K	C CHIP 25V 0.1UF	
C6006	ECEA0JKA101	ELECTROLYTIC 6.3V 100UF	
C6009	ECEA1CKS100	ELECTROLYTIC 16V 10UF	
C6013	ECJ2VC1H101J	C CHIP 50V 100PF	
C6017	ECJ2VC1H101J	C CHIP 50V 100PF	
C6018	ECJ2VC1H101J	C CHIP 50V 100PF	
C6020	ECJ2VF1H104Z	C CHIP 50V 0.1UF	
C6021	ECEA0JKA101	ELECTROLYTIC 6.3V 100UF	
C6029	ECJ2VF1H104Z	C CHIP 50V 0.1UF	
C6040	ECJ2VB1H102K	C CHIP 50V 1000PF	
C6041	ECJ2VB1H102K	C CHIP 50V 1000PF	
C6044	ECJ2VF1E104Z	C CHIP 25V 0.1UF	
C6201	ECJ2VB1H102K	C CHIP 50V 1000PF	
C6202	ECJ2VB1H103K	C CHIP 50V 0.01UF	

Ref. No.	Part No.	Part Name & Description	Remarks
C6203	ECJ2VB1H332K	C CHIP 50V 3300PF	
C6204	ECJ2VB1H103K	C CHIP 50V 0.01UF	
C6207	ECJ2VF1H104Z	C CHIP 50V 0.1UF	
C6208	ECEA1CKS100	ELECTROLYTIC 16V 10UF	
C6209	ECJ2VB1H102K	C CHIP 50V 1000PF	
C6212	ECJ2VF1H104Z	C CHIP 50V 0.1UF	
C6213	ECEA0JKS331I	ELECTROLYTIC 6.3V 330UF	
C6214	ECEA0JKS220	ELECTROLYTIC 6.3V 22UF	
C6215	ECJ2VB1H272K	C CHIP 50V 2700PF	
C6216	ECJ2VB1H103K	C CHIP 50V 0.01UF	
C6220	ECEA1CKA470	ELECTROLYTIC 16V 47UF	
C6221	ECEA0JKA221	ELECTROLYTIC 6.3V 220UF	
C6401	ECJ2VF1H104Z	C CHIP 50V 0.1UF	
C6402	ECEA0JKA101	ELECTROLYTIC 6.3V 100UF	
C6403	ECEA1HKS010	ELECTROLYTIC 50V 1UF	
C6404	ECJ2VC1H121J	C CHIP 50V 120PF	

FILTERS

Ref. No.	Part No.	Part Name & Description	Remarks
FL4051	VLFS0014	FILTER	

COILS

Ref. No.	Part No.	Part Name & Description	Remarks
L1301	ELF15N005A	LINE FILTER 0.5A 18MH	⚠
L1301	ELF18D290A	LINE FILTER 0.5A 18MH	⚠
L1301	G0B183D00001	LINE FILTER 0.5A 18MH	⚠
L1301	J0HBLD000001	LINE FILTER 0.5A 18MH	⚠
L1301	VLQS0167	LINE FILTER 0.5A 18MH	⚠
L1301	VLQS0170	LINE FILTER 0.6A 18MH	⚠
L1302	J0JHB0000021	FILTER	
L1303	VLQSAB7D220K	COIL 22UH	
L3001	G0C390KA0045	COIL 39UH	
L3002	VLQSAB7D101K	COIL 100UH	
L3005	G0C330KA0045	COIL 33UH	
L3010	VLQSAB7D470K	COIL 47UH	
L3231	ELESN221KA	COIL 220UH	
L4001	ELELN153KA	COIL 15MH	
L4002	ELESN101KA	COIL 100UH	
L4004	G0C100KA0045	COIL 10UH	
L4101	ELESN471KA	COIL 470UH	
L5301	ERJ6GEY0R00V	MGF CHIP 1/10W 0	
L5302	ERJ6GEY0R00V	MGF CHIP 1/10W 0	
L5303	ERJ6GEY0R00V	MGF CHIP 1/10W 0	
L5901	ELESN101KA	COIL 100UH	
L6201	ELEXT101KE04	COIL 100UH	
L6401	ELEXT101KE04	COIL 100UH	

CRYSTAL OSCILLATOR

Ref. No.	Part No.	Part Name & Description	Remarks
X3001	VSXS0195	CRYSTAL OSCILLATOR	
X3301	VSXS0238	CRYSTAL OSCILLATOR	
X5501	H2A503300012	CRYSTAL OSCILLATOR	
X5601	VSXS0208-A	CRYSTAL OSCILLATOR	
X6001	VSXS0784	CRYSTAL OSCILLATOR	

PIN HEADERS

Ref. No.	Part No.	Part Name & Description	Remarks
P1201	K1MP07A00005	7PIN WIRE TRAP	
P1202	K1MP08A00010	8PIN WIRE TRAP	
P1301	LSJP0814	CONNECTOR 2P	
P1303	K1KA02A00009	PIN HEADER 2P	
P3001	K1KA15A00104	CONNECTOR 15P	
P4001	VJSS0888	FE CONNECTOR 2P	
P4002	LSJWM6N120CL	PARALLEL CONNECTOR	
P4004	VJSS0875	CONNECTOR RECEPTACLE 13P	
P5301	K1MP04A00006	WIRE TRAP	
P5501	VJPS0772	CONNECTOR PLUG 19P	
P6001	K1KA05A00268	CONNECTOR 5P	
P6002	VJSS0875	CONNECTOR RECEPTACLE 13P	
P6003	VJPS0771	CONNECTOR PLUG 13P	
P6201	K1KA12A00234	PIN HEADER	
P6301	K1KA07A00056	CONNECTOR 7P	

SWITCHES

Ref. No.	Part No.	Part Name & Description	Remarks
SW6001	LSSH0002	LEAF SWITCH-SAFETY TAB	<R>
SW6002	LSSS0008	MODE SWITCH	<R>
SW6301	EVQ21405R	PUSH SWITCH	
SW6302	EVQ21405R	PUSH SWITCH	
SW6303	EVQ21405R	PUSH SWITCH	
SW6304	EVQ21405R	PUSH SWITCH	
SW6305	EVQ21405R	PUSH SWITCH	
SW6307	EVQ21405R	PUSH SWITCH	
SW6308	EVQ21405R	PUSH SWITCH	
SW6309	EVQ21405R	PUSH SWITCH	
SW6310	EVQ21405R	PUSH SWITCH	
SW6312	EVQ21405R	PUSH SWITCH	
SW6313	EVQ21405R	PUSH SWITCH	

FUSE& PROTECTOR

Ref. No.	Part No.	Part Name & Description	Remarks
F1301	VSFS0003A16	FUSE 125V 1.6A	⚠ <R>
F1301	K5D162AB0003	FUSE 125V 1.6A	⚠ <R>
F1301	K5D162AQ0004	FUSE 125V 1.6A	⚠ <R>
PR1301	UNH000600A	IC PROTECTOR 1.5A	⚠ <R>
PR1301	B1ZAZ0000040	IC PROTECTOR 1.5A	⚠ <R>
PR1301	LSSF009A25E	IC PROTECTOR 1.5A	⚠ <R>

TRANSFORMER

Ref. No.	Part No.	Part Name & Description	Remarks
T1301	LSTP0114	TRANSFORMER	⚠ <R>
T4101	VLTS0304	TRANSFORMER	<R>

PRINTED CIRCUIT BOARD ASSEMBLY

Ref. No.	Part No.	Part Name & Description	Remarks
E11	VEPS4038A	AUDIO C.B.A.	<R>

MISCELLANEOUS

Ref. No.	Part No.	Part Name & Description	Remarks
154	TMM5439-1	CLAMPER	
771	EYF52BC	FUSE HOLDER	

12.3.2. AUDIO C.B.A.

INTEGRATED CIRCUITS

Ref. No.	Part No.	Part Name & Description	Remarks
IC4201	AN3962FB-V	IC, LINEAR	<R>
IC4301	C0JBAR000292	IC, CMOS STANDARD LOGIC	E.S.D. <R>
IC4301	CD4053BCM	IC, CMOS STANDARD LOGIC	E.S.D. <R>
IC4302	C1BB00000177	IC, LINEAR	<R>
IC4302	C0ABBB000017	IC, LINEAR	<R>
IC4601	BD3867S	IC, LOGIC(OTHER)	E.S.D. <R>
IC5651	C1AB00001288	IC, LOGIC	E.S.D. <R>
IC9001	CXA2064M	IC, LINEAR	<R>
IC9201	AN7420-NT	IC, LINEAR	<R>

TRANSISTORS

Ref. No.	Part No.	Part Name & Description	Remarks
Q4301	2SD0601A0L	TRANSISTOR SI NPN CHIP	
Q4301	B1ABCF000011	TRANSISTOR SI NPN CHIP	
Q4302	2SD0601A0L	TRANSISTOR SI NPN CHIP	
Q4302	B1ABCF000011	TRANSISTOR SI NPN CHIP	
Q4303	UNR221200L	TRANSISTOR SI NPN CHIP	
Q4303	B1GBCFLL0002	TRANSISTOR SI NPN CHIP	
Q4304	UNR211L00L	TRANSISTOR SI PNP CHIP	
Q4305	UNR221L00L	TRANSISTOR SI PNP CHIP	
Q5651	2SB0709A0L	TRANSISTOR SI PNP CHIP	
Q5651	B1ADCF000001	TRANSISTOR SI PNP CHIP	
Q5652	2SD0601A0L	TRANSISTOR SI NPN CHIP	
Q5652	B1ABCF000011	TRANSISTOR SI NPN CHIP	
Q5653	2SB0709A0L	TRANSISTOR SI PNP CHIP	
Q5653	B1ADCF000001	TRANSISTOR SI PNP CHIP	
Q5654	2SB0709A0L	TRANSISTOR SI PNP CHIP	
Q5654	B1ADCF000001	TRANSISTOR SI PNP CHIP	
Q5655	2SD0601A0L	TRANSISTOR SI NPN CHIP	
Q5655	B1ABCF000011	TRANSISTOR SI NPN CHIP	
Q5656	2SD0601A0L	TRANSISTOR SI NPN CHIP	
Q5656	B1ABCF000011	TRANSISTOR SI NPN CHIP	
Q9001	2SD0601A0L	TRANSISTOR SI NPN CHIP	
Q9001	B1ABCF000011	TRANSISTOR SI NPN CHIP	
Q9002	2SD0601A0L	TRANSISTOR SI NPN CHIP	
Q9002	B1ABCF000011	TRANSISTOR SI NPN CHIP	

DIODES

Ref. No.	Part No.	Part Name & Description	Remarks
D4301	MA2C165001VT	DIODE SI	
D4301	B0AACK000004	DIODE SI	
D4301	1SS119	DIODE SI	
D4302	MA4120N-M	DIODE ZENER 12V	
D4303	MA2C165001VT	DIODE SI	
D4303	B0AACK000004	DIODE SI	
D4303	1SS119	DIODE SI	
D9001	MA2C165001VT	DIODE SI	
D9001	B0AACK000004	DIODE SI	
D9001	1SS119	DIODE SI	

RESISTORS

Ref. No.	Part No.	Part Name & Description	Remarks
R4201	ERJ6GEYJ472V	MGF CHIP 1/10W 4.7K	
R4202	ERJ6GEYJ472V	MGF CHIP 1/10W 4.7K	
R4203	ERJ6GEYJ511V	MGF CHIP 1/10W 510	
R4204	ERJ6GEYJ511V	MGF CHIP 1/10W 510	
R4205	ERJ6GEYJ393V	MGF CHIP 1/10W 39K	
R4206	ERJ6GEYJ393V	MGF CHIP 1/10W 39K	
R4207	ERJ6GEYJ183V	MGF CHIP 1/10W 18K	
R4208	ERJ6GEYJ183V	MGF CHIP 1/10W 18K	
R4209	ERJ6GEY0R00V	MGF CHIP 1/10W 0	
R4210	ERA6YEB153V	MGF CHIP 1/10W 15K	
R4211	ERJ6GEYJ152V	MGF CHIP 1/10W 1.5K	
R4212	ERJ6GEYJ152V	MGF CHIP 1/10W 1.5K	
R4213	ERJ6GEYJ123V	MGF CHIP 1/10W 12K	
R4214	ERJ6GEYJ273V	MGF CHIP 1/10W 27K	
R4215	ERJ6GEYJ102V	MGF CHIP 1/10W 1K	
R4216	ERJ6GEYJ101V	MGF CHIP 1/10W 100	
R4217	ERJ6GEYJ101V	MGF CHIP 1/10W 100	
R4218	ERJ6GEYJ473V	MGF CHIP 1/10W 47K	
R4219	ERJ6GEYJ473V	MGF CHIP 1/10W 47K	
R4220	ERJ6GEYJ333V	MGF CHIP 1/10W 33K	
R4221	ERJ6GEYJ333V	MGF CHIP 1/10W 33K	
R4222	ERJ6GEYJ153V	MGF CHIP 1/10W 15K	
R4223	ERJ6GEYJ153V	MGF CHIP 1/10W 15K	
R4228	ERJ6GEYJ101V	MGF CHIP 1/10W 100	
R4229	ERJ6GEYJ101V	MGF CHIP 1/10W 100	
R4230	ERJ6GEYJ103V	MGF CHIP 1/10W 10K	
R4231	ERJ6GEYJ273V	MGF CHIP 1/10W 27K	
R4232	ERJ6GEYJ103V	MGF CHIP 1/10W 10K	
R4233	ERJ6GEYJ273V	MGF CHIP 1/10W 27K	
R4301	ERJ6GEYJ102V	MGF CHIP 1/10W 1K	
R4302	ERJ6GEYJ562V	MGF CHIP 1/10W 5.6K	
R4303	ERJ6GEYJ472V	MGF CHIP 1/10W 4.7K	
R4304	ERJ6GEYJ472V	MGF CHIP 1/10W 4.7K	
R4305	ERJ6GEYJ473V	MGF CHIP 1/10W 47K	
R4306	ERDS2TJ101	CARBON 1/4W 100	
R4307	ERDS2TJ101	CARBON 1/4W 100	
R4308	ERJ6GEYJ473V	MGF CHIP 1/10W 47K	
R4309	ERJ6GEYJ104V	MGF CHIP 1/10W 100K	
R4310	ERJ6GEYJ104V	MGF CHIP 1/10W 100K	
R4311	ERJ6GEYJ473V	MGF CHIP 1/10W 47K	
R4312	ERJ6GEYJ473V	MGF CHIP 1/10W 47K	
R4313	ERJ6GEYJ473V	MGF CHIP 1/10W 47K	
R4314	ERJ6GEYJ473V	MGF CHIP 1/10W 47K	
R4315	ERJ6GEYJ103V	MGF CHIP 1/10W 10K	
R4316	ERJ6GEYJ103V	MGF CHIP 1/10W 10K	
R4317	ERJ6GEYJ103V	MGF CHIP 1/10W 10K	
R4318	ERJ6GEYJ473V	MGF CHIP 1/10W 47K	
R4319	ERJ6GEYJ101V	MGF CHIP 1/10W 100	
R4320	ERJ6GEYJ473V	MGF CHIP 1/10W 47K	
R4321	ERJ6GEYJ101V	MGF CHIP 1/10W 100	
R4601	ERJ6GEYJ105V	MGF CHIP 1/10W 1M	
R4602	ERJ6GEYJ394V	MGF CHIP 1/10W 390K	
R4603	ERDS2TJ472	CARBON 1/4W 4.7K	
R4604	ERJ6GEYJ472V	MGF CHIP 1/10W 4.7K	

Ref. No.	Part No.	Part Name & Description	Remarks
R4605	ERJ6GEYJ472V	MGF CHIP 1/10W 4.7K	
R4606	ERJ6GEYJ472V	MGF CHIP 1/10W 4.7K	
R4607	ERDS2TJ101	CARBON 1/4W 100	
R4608	ERDS2TJ101	CARBON 1/4W 100	
R4611	ERJ6GEYJ102V	MGF CHIP 1/10W 1K	
R4612	ERJ6GEYJ102V	MGF CHIP 1/10W 1K	
R4613	ERJ6GEYJ102V	MGF CHIP 1/10W 1K	
R4614	ERJ6GEYJ102V	MGF CHIP 1/10W 1K	
R5651	ERJ6GEYJ331V	MGF CHIP 1/10W 330	
R5652	ERJ6GEYJ102V	MGF CHIP 1/10W 1K	
R5653	ERJ6GEYJ682V	MGF CHIP 1/10W 6.8K	
R5654	ERJ6GEYJ152V	MGF CHIP 1/10W 1.5K	
R5655	ERJ6GEYJ222V	MGF CHIP 1/10W 2.2K	
R5656	ERJ6GEYJ153V	MGF CHIP 1/10W 15K	
R5657	ERJ6GEYJ333V	MGF CHIP 1/10W 33K	
R5659	ERJ6GEYJ222V	MGF CHIP 1/10W 2.2K	
R5660	ERJ6GEYJ821V	MGF CHIP 1/10W 820	
R5661	ERJ6GEYJ391V	MGF CHIP 1/10W 390	
R5662	ERJ6GEYJ391V	MGF CHIP 1/10W 390	
R5663	ERJ6GEYJ471V	MGF CHIP 1/10W 470	
R5664	ERJ6GEYJ561V	MGF CHIP 1/10W 560	
R5665	ERJ6GEYJ102V	MGF CHIP 1/10W 1K	
R5666	ERJ6GEYJ561V	MGF CHIP 1/10W 560	
R5668	ERJ6GEYJ102V	MGF CHIP 1/10W 1K	
R5670	ERJ6GEYJ102V	MGF CHIP 1/10W 1K	
R9001	EVNCYAA03B14	VARIABLE 10K	
R9002	ERJ6GEYG683V	MGF CHIP 1/10W 68K	
R9003	EVNDCAA03B14	VARIABLE 10K	
R9004	ERJ6GEYJ222V	MGF CHIP 1/10W 2.2K	
R9005	ERJ6GEYJ105V	MGF CHIP 1/10W 1M	
R9006	ERJ6GEYJ104V	MGF CHIP 1/10W 100K	
R9007	ERJ6GEYJ392V	MGF CHIP 1/10W 3.9K	
R9008	EVMAASA00B53	VARIABLE 5K	
R9009	ERJ6GEYJ332V	MGF CHIP 1/10W 3.3K	
R9010	ERJ6GEYJ102V	MGF CHIP 1/10W 1K	
R9011	ERJ6GEYJ102V	MGF CHIP 1/10W 1K	
R9012	ERJ6GEYJ102V	MGF CHIP 1/10W 1K	
R9017	ERJ6GEYJ821V	MGF CHIP 1/10W 820	
R9018	ERJ6GEYJ102V	MGF CHIP 1/10W 1K	
R9201	ERJ6GEYJ102V	MGF CHIP 1/10W 1K	
R9202	ERJ6GEYJ103V	MGF CHIP 1/10W 10K	
R9203	ERJ6GEYJ102V	MGF CHIP 1/10W 1K	
R9204	ERJ6GEYJ224V	MGF CHIP 1/10W 220K	
R9205	ERJ6GEYJ332V	MGF CHIP 1/10W 3.3K	
R9206	EVMAASA00B53	VARIABLE 5K	
R9207	ERJ6GEYJ332V	MGF CHIP 1/10W 3.3K	
R9208	ERDS2TJ392	CARBON 1/4W 3.9K	
R9209	ERJ6GEYJ272V	MGF CHIP 1/10W 2.7K	

CAPACITORS

Ref. No.	Part No.	Part Name & Description	Remarks
C4201	ECEA1CKA100	ELECTROLYTIC 16V 10UF	
C4202	ECEA1HKA010	ELECTROLYTIC 50V 1UF	
C4203	ECEA1HKA010	ELECTROLYTIC 50V 1UF	
C4204	ECEA1HKA010	ELECTROLYTIC 50V 1UF	
C4205	ECEA1HKA010	ELECTROLYTIC 50V 1UF	
C4206	ECEA1HKA010	ELECTROLYTIC 50V 1UF	
C4207	ECEA1HKA010	ELECTROLYTIC 50V 1UF	
C4208	ECJ2VF1E104Z	C CHIP 25V 0.1UF	
C4209	ECJ2VF1E104Z	C CHIP 25V 0.1UF	
C4210	ECEA0JKA330I	ELECTROLYTIC 6.3V 33UF	
C4211	ECEA0JKA330I	ELECTROLYTIC 6.3V 33UF	
C4212	ECJ2VB1H473K	C CHIP 50V 0.047UF	
C4213	ECJ2VB1H473K	C CHIP 50V 0.047UF	
C4214	ECEA1HKA2R2	ELECTROLYTIC 50V 2.2UF	
C4215	ECEA1HKA2R2	ELECTROLYTIC 50V 2.2UF	
C4216	ECEA0JKA101	ELECTROLYTIC 6.3V 100UF	
C4217	ECEA0JKA101	ELECTROLYTIC 6.3V 100UF	
C4218	ECJ2VB1H153K	C CHIP 50V 0.015UF	
C4219	ECJ2VB1H153K	C CHIP 50V 0.015UF	
C4220	ECJ2VB1H103K	C CHIP 50V 0.01UF	
C4221	ECJ2VB1H103K	C CHIP 50V 0.01UF	
C4223	ECJ2VF1H103Z	C CHIP 50V 0.01UF	
C4224	ECJ2VF1C224Z	C CHIP 16V 0.22UF	
C4225	ECEA1HKA010	ELECTROLYTIC 50V 1UF	
C4226	ECEA1CKA100	ELECTROLYTIC 16V 10UF	
C4227	ECJ2VF1E104Z	C CHIP 25V 0.1UF	
C4228	ECEA0JKA470	ELECTROLYTIC 6.3V 47UF	
C4229	ECEA1CKA100	ELECTROLYTIC 16V 10UF	
C4230	ECEA1CKA100	ELECTROLYTIC 16V 10UF	
C4301	ECEA1CKA100	ELECTROLYTIC 16V 10UF	
C4302	ECEA1CKA100	ELECTROLYTIC 16V 10UF	
C4303	ECJ2VF1H103Z	C CHIP 50V 0.01UF	
C4304	ECJ2VF1H103Z	C CHIP 50V 0.01UF	
C4305	ECEA1CKA100	ELECTROLYTIC 16V 10UF	
C4306	ECEA1CKA100	ELECTROLYTIC 16V 10UF	
C4307	ECEA1CKA100	ELECTROLYTIC 16V 10UF	
C4308	ECJ2VF1H103Z	C CHIP 50V 0.01UF	
C4309	ECEA1CKA100	ELECTROLYTIC 16V 10UF	
C4310	ECEA1CKN100	ELECTROLYTIC 16V 10UF	
C4311	ECEA1CKN100	ELECTROLYTIC 16V 10UF	
C4312	ECEA1CKN100	ELECTROLYTIC 16V 10UF	
C4313	ECEA1CKN100	ELECTROLYTIC 16V 10UF	
C4601	ECEA1EKA4R7	ELECTROLYTIC 25V 4.7UF	
C4602	ECEA1CKA100	ELECTROLYTIC 16V 10UF	
C4603	ECJ2VB1E683K	C CHIP 25V 0.068UF	
C4604	ECJ2VB1H102K	C CHIP 50V 1000PF	
C4605	ECEA1CKA100	ELECTROLYTIC 16V 10UF	
C4606	ECEA1CKA100	ELECTROLYTIC 16V 10UF	
C4612	ECEA1EKA4R7	ELECTROLYTIC 25V 4.7UF	
C4613	ECEA1EKA4R7	ELECTROLYTIC 25V 4.7UF	
C4614	ECEA1EKA4R7	ELECTROLYTIC 25V 4.7UF	
C4615	ECEA1EKA4R7	ELECTROLYTIC 25V 4.7UF	
C4616	ECJ2VF1E104Z	C CHIP 25V 0.1UF	
C4617	ECJ2VF1E104Z	C CHIP 25V 0.1UF	

Ref. No.	Part No.	Part Name & Description	Remarks
C4618	ECEA1CKA100	ELECTROLYTIC 16V 10UF	
C4619	ECJ2VB1H102K	C CHIP 50V 1000PF	
C4620	ECJ2VB1E683K	C CHIP 25V 0.068UF	
C4621	ECEA1CKA100	ELECTROLYTIC 16V 10UF	
C4622	ECEA1CKA100	ELECTROLYTIC 16V 10UF	
C4623	ECA1CM471B	ELECTROLYTIC 16V 470UF	
C5652	ECJ2VC1H100C	C CHIP 50V 10PF	
C5653	ECJ2VF1H103Z	C CHIP 50V 0.01UF	
C5654	ECEA1HKA010	ELECTROLYTIC 50V 1UF	
C5655	ECJ2VC1H270J	C CHIP 50V 27PF	
C5656	ECEA0JKA470	ELECTROLYTIC 6.3V 47UF	
C5657	ECJ2VF1E104Z	C CHIP 25V 0.1UF	
C5658	ECJ2VF1H103Z	C CHIP 50V 0.01UF	
C5659	ECJ2VF1H103Z	C CHIP 50V 0.01UF	
C5660	ECJ2VF1H103Z	C CHIP 50V 0.01UF	
C5661	ECJ2VF1H104Z	C CHIP 50V 0.1UF	
C5662	ECEA0JKA470	ELECTROLYTIC 6.3V 47UF	
C5663	ECJ2VF1H103Z	C CHIP 50V 0.01UF	
C5664	ECJ2VF1H103Z	C CHIP 50V 0.01UF	
C5665	ECJ2VF1H103Z	C CHIP 50V 0.01UF	
C5666	ECEA0JKA220	ELECTROLYTIC 6.3V 22UF	
C5668	ECJ2VF1H103Z	C CHIP 50V 0.01UF	
C5669	ECJ2VC1H181J	C CHIP 50V 180PF	
C5670	ECJ2VF1H103Z	C CHIP 50V 0.01UF	
C5671	ECJ2VF1H103Z	C CHIP 50V 0.01UF	
C5672	ECJ2VF1H103Z	C CHIP 50V 0.01UF	
C5673	ECJ2VC1H560J	C CHIP 50V 56PF	
C5674	ECJ2VC1H390J	C CHIP 50V 39PF	
C5675	ECJ2VF1E104Z	C CHIP 25V 0.1UF	
C5676	ECEA1CKA220	ELECTROLYTIC 16V 22UF	
C5677	ECJ2VF1E104Z	C CHIP 25V 0.1UF	
C5678	ECEA1CKS220	ELECTROLYTIC 16V 22UF	
C5680	ECJ2VC1H270J	C CHIP 50V 27PF	
C9001	ECEA1EKA4R7	ELECTROLYTIC 25V 4.7UF	
C9002	ECEA1EKA4R7	ELECTROLYTIC 25V 4.7UF	
C9003	ECEA1EKA4R7	ELECTROLYTIC 25V 4.7UF	
C9004	ECEA1EKA4R7	ELECTROLYTIC 25V 4.7UF	
C9005	ECEA1CKA100	ELECTROLYTIC 16V 10UF	
C9006	ECEA1HKA010	ELECTROLYTIC 50V 1UF	
C9007	ECJ2VB1H562K	C CHIP 50V 5600PF	
C9008	ECJ2VB1E123K	C CHIP 25V 0.012UF	
C9009	ECEA1EKN4R7I	ELECTROLYTIC 25V 4.7UF	
C9010	ECEA1HKA010	ELECTROLYTIC 50V 1UF	
C9011	ECEA1CKA100	ELECTROLYTIC 16V 10UF	
C9012	ECEA1CKA100	ELECTROLYTIC 16V 10UF	
C9013	ECEA1CKA100	ELECTROLYTIC 16V 10UF	
C9014	ECEA1EKN4R7I	ELECTROLYTIC 25V 4.7UF	
C9015	ECEA1HKA3R3I	ELECTROLYTIC 50V 3.3UF	
C9016	ECEA1EKN4R7I	ELECTROLYTIC 25V 4.7UF	
C9017	ECJ2VB1E473K	C CHIP 25V 0.047UF	
C9018	ECJ2VB1H272K	C CHIP 50V 2700PF	
C9019	ECJ2VF1H103Z	C CHIP 50V 0.01UF	
C9020	ECEA1CKA220	ELECTROLYTIC 16V 22UF	
C9201	ECJ2VF1H103Z	C CHIP 50V 0.01UF	

Ref. No.	Part No.	Part Name & Description	Remarks
C9202	ECEA0JKA470	ELECTROLYTIC 6.3V 47UF	
C9203	ECEA1CKA100	ELECTROLYTIC 16V 10UF	
C9204	ECQP1H102JZ3	POLYESTER 50V 1000PF	
C9205	ECEA1HKA010	ELECTROLYTIC 50V 1UF	
C9206	ECEA1HKA3R3I	ELECTROLYTIC 50V 3.3UF	
C9207	ECEA1HKA010	ELECTROLYTIC 50V 1UF	
C9208	ECJ2VB1H223K	C CHIP 50V 0.022UF	
C9209	ECJ2VB1H223K	C CHIP 50V 0.022UF	
C9210	ECEA1HKA010	ELECTROLYTIC 50V 1UF	
C9211	ECEA1HKA010	ELECTROLYTIC 50V 1UF	

FILTERS

Ref. No.	Part No.	Part Name & Description	Remarks
FL5651	LSLF0053	EMI FILTER	

COILS

Ref. No.	Part No.	Part Name & Description	Remarks
L4601	ELEXT101KE04	COIL 100UH	
L5652	ELESN150KA	COIL 15UH	
L5653	LSLQF06R101K	COIL 100UH	
L5654	ELESN4R7KA	COIL 4.7UH	
L5656	ELESN101KA	COIL 100UH	
L5657	ELESN101KA	COIL 100UH	
L5658	ELESN101KA	COIL 100UH	
L9001	ELESN101KA	COIL 100UH	
L9201	ELESN101KA	COIL 100UH	

PIN HEADERS

Ref. No.	Part No.	Part Name & Description	Remarks
P4003	VEKS5831	CONNECTOR CABLE W/PLUG,5V	
P4201	VJHS0293	PACK PIN 3P	
P4202	VJHS0299	PACK PIN 9P	
P4203	VJHS0290	PACK PIN 10P	
P4204	VJHS0290	PACK PIN 10P	
P4205	VJHS0295	PACK PIN 5P	
P4206	VEKS5820	CONNECTOR CABLE W/PLUG,5V	
P4207	VJHS0296	PIN HEADER 6P	
P5651	VJHS0296	PIN HEADER 6P	
P5652	VJHS0295	PACK PIN 5P	

MISCELLANEOUS

Ref. No.	Part No.	Part Name & Description	Remarks
713	VMAS1912	P.C.B. SUPPORT ANGLE	

12.3.3. Hi-Fi AUDIO/VIDEO HEAD AMP C.B.A.

INTEGRATED CIRCUITS

Ref. No.	Part No.	Part Name & Description	Remarks
IC3501	AN3361SB	IC, LINEAR	<R>
IC4401	AN3328S	IC, LINEAR	<R>

RESISTORS

Ref. No.	Part No.	Part Name & Description	Remarks
R3501	ERJ6GEYJ473V	MGF CHIP 1/10W 47K	
R3502	ERJ6GEYJ560V	MGF CHIP 1/10W 56	
R3503	ERJ6GEYJ560V	MGF CHIP 1/10W 56	
R3504	ERJ6GEYJ560V	MGF CHIP 1/10W 56	
R3505	ERJ6GEYJ560V	MGF CHIP 1/10W 56	
R3506	ERJ6GEYJ561V	MGF CHIP 1/10W 560	
R3507	ERJ6GEYJ561V	MGF CHIP 1/10W 560	
R4405	ERJ6GEYJ102V	MGF CHIP 1/10W 1K	
R4406	ERJ6GEYJ180V	MGF CHIP 1/10W 18	
R4407	ERJ6GEYJ561V	MGF CHIP 1/10W 560	
R4408	ERJ6GEY0R00V	MGF CHIP 1/10W 0	
R4410	ERJ6GEYJ102V	MGF CHIP 1/10W 1K	
R4411	ERJ6GEYJ102V	MGF CHIP 1/10W 1K	

CAPACITORS

Ref. No.	Part No.	Part Name & Description	Remarks
C3504	ECJ2VF1H103Z	C CHIP 50V 0.01UF	
C3505	ECEA1CKA470	ELECTROLYTIC 16V 47UF	
C3506	ECJ2VF1E104Z	C CHIP 25V 0.1UF	
C3507	ECJ2VB1H102K	C CHIP 50V 1000PF	
C3508	ECJ2VF1E104Z	C CHIP 25V 0.1UF	
C3511	ECJ2VF1E104Z	C CHIP 25V 0.1UF	
C3512	ECJ2VF1E104Z	C CHIP 25V 0.1UF	
C3513	ECJ2VF1E104Z	C CHIP 25V 0.1UF	
C3519	ECJ2VF1E104Z	C CHIP 25V 0.1UF	
C3520	ECJ2VF1E104Z	C CHIP 25V 0.1UF	
C3523	ECJ2VF1E104Z	C CHIP 25V 0.1UF	
C3524	ECJ2VF1E104Z	C CHIP 25V 0.1UF	
C3528	ECJ2VF1E104Z	C CHIP 25V 0.1UF	
C3529	ECJ2VF1H103Z	C CHIP 50V 0.01UF	
C3532	ECJ2VF1E104Z	C CHIP 25V 0.1UF	
C3533	ECJ2VF1H103Z	C CHIP 50V 0.01UF	
C4401	ECJ2VB1H102K	C CHIP 50V 1000PF	
C4402	ECJ2VB1H102K	C CHIP 50V 1000PF	
C4405	ECJ2VF1H103Z	C CHIP 50V 0.01UF	
C4406	ECJ2VB1H472K	C CHIP 50V 4700PF	
C4408	ECEA1CKA100	ELECTROLYTIC 16V 10UF	
C4409	ECJ2VF1H103Z	C CHIP 50V 0.01UF	
C4411	ERJ6GEY0R00V	MGF CHIP 1/10W 0	
C4412	ECJ2VF1H104Z	C CHIP 50V 0.1UF	
C4413	ECJ2VF1H104Z	C CHIP 50V 0.1UF	
C4414	ECEA0JKA470	ELECTROLYTIC 6.3V 47UF	

COILS

Ref. No.	Part No.	Part Name & Description	Remarks
L3501	G0C101KA0045	COIL 100UH	
L4401	G0C101KA0045	COIL 100UH	

PIN HEADERS

Ref. No.	Part No.	Part Name & Description	Remarks
P3501	K1KB15B00019	CONNECTOR 15P	

12.3.4. TV MAIN C.B.A.

INTEGRATED CIRCUITS

Ref. No.	Part No.	Part Name & Description	Remarks
IC501	B3PAA0000242	IC, LINEAR	⚠ <R>
IC801	C5HABZZ00051	IC, LINEAR	⚠ <R>

TRANSISTORS

Ref. No.	Part No.	Part Name & Description	Remarks
Q501	B1AACN000013	TRANSISTOR SI NPN	
Q551	B1BAER000007	TRANSISTOR SI NPN	⚠
Q571	2SC945A-TQ	TRANSISTOR SI NPN	
Q571	2SC2785-TH	TRANSISTOR SI NPN	
Q571	2SC2785-TJ	TRANSISTOR SI NPN	
Q581	B1ACBM000001	TRANSISTOR SI NPN	
Q581	2SA1767-Q	TRANSISTOR SI NPN	
Q581	2SB1221-Q	TRANSISTOR SI NPN	
Q801	2SC945A-TQ	TRANSISTOR SI NPN	
Q801	2SC2785-TH	TRANSISTOR SI NPN	
Q801	2SC2785-TJ	TRANSISTOR SI NPN	
Q7001	2SA1309ARA	TRANSISTOR SI PNP	
Q7001	B1ACCF000006	TRANSISTOR SI PNP	
Q7001	MSA1048BTPE4	TRANSISTOR SI PNP	

DIODES

Ref. No.	Part No.	Part Name & Description	Remarks
D503	ERB43-04V	DIODE SI	
D503	B0HAJP000012	DIODE SI	
D505	MA2C165001VT	DIODE SI	
D505	B0AACK000004	DIODE SI	
D505	1SS119	DIODE SI	
D553	ERB43-04V	DIODE SI	
D553	B0HAJP000012	DIODE SI	
D554	4148-TA	DIODE SI	
D554	MA2C16700E	DIODE SI	
D558	ERB43-04V	DIODE SI	
D558	B0HAJP000012	DIODE SI	
D582	B0HAPV000005	DIODE SI	
D591	D4DDF5R00005	THERMISTOR	⚠
D806	MA2C16700E	DIODE SI	
D806	4148-TA	DIODE SI	
D807	B0AAKT000010	DIODE SI	⚠
D807	B0EAKT000007	DIODE SI	⚠
D808	B0AAKT000010	DIODE SI	⚠
D808	B0EAKT000007	DIODE SI	⚠
D809	B0AAKT000010	DIODE SI	⚠
D809	B0EAKT000007	DIODE SI	⚠
D810	B0AAKT000010	DIODE SI	⚠
D810	B0EAKT000007	DIODE SI	⚠
D811	ERZV10V361CS	SURGE ABSORBER	⚠
D882	ERZV10V361CS	SURGE ABSORBER	⚠

RESISTORS

Ref. No.	Part No.	Part Name & Description	Remarks
R501	ERDS2TJ681	CARBON 1/4W 680	
R502	ERDS2TJ332	CARBON 1/4W 3.3K	
R505	ERDS2TJ561	CARBON 1/4W 560	
R511	ERG3FJ272H	METAL OXIDE 3W 2.7K	
R513	ERG12SJ560P	METAL OXIDE 1/2W 56	
R516	LAR05222J09	W FLMPRF 5W 2.2K	
R552	ERDS2TJ472	CARBON 1/4W 4.7K	
R553	ERDS2TJ102	CARBON 1/4W 1K	
R554	ERDS2TJ822	CARBON 1/4W 8.2K	
R555	ERDS2TJ683	CARBON 1/4W 68K	
R556	ERDS2TJ623T	CARBON 1/4W 62K	
R558	ERG2ANJ102H	METAL OXIDE 2W 1K	
R559	ERDS2TJ103	CARBON 1/4W 10K	
R561	ERQ2CKPR82S	FUSE 2W 0.82	⚠
R562	ERF5ZK2R2	W FLMPRF 5W 2.2	
R571	ERDS2TJ101	CARBON 1/4W 100	
R572	ERDS2TJ331	CARBON 1/4W 330	
R573	ERDS2TJ221	CARBON 1/4W 220	
R574	ERDS2TJ273	CARBON 1/4W 27K	
R581	ERDS1FJ1R5P	CARBON 1/2W 1.5	⚠
R582	ERDS1FJ1R5P	CARBON 1/2W 1.5	⚠
R583	ERDS1FJ1R2P	CARBON 1/2W 1.2	⚠

Ref. No.	Part No.	Part Name & Description	Remarks
R584	ERDS2TJ562	CARBON 1/4W 5.6K	
R585	ERDS2TJ473	CARBON 1/4W 47K	
R586	ERDS2TJ393	CARBON 1/4W 39K	
R591	ERF5ZJ121	W FLMPRF 5W 120	
R801	ERF5ZKR82	W FLMPRF 5W 0.82	⚠
R802	ERDS1FPJ103V	CARBON 1/2W 10K	⚠
R802	ERDS1FJ103P	CARBON 1/2W 10K	⚠
R803	ERF10ZK8R2S	W FLMPRF 10W 8.2	
R804	ERF20ZJ131	W FLMPRF 20W 130	
R805	ERDS2TJ104	CARBON 1/4W 100K	
R806	ERQ14AJ470P	FUSE 1/4W 47	⚠
R809	ERDS2TJ222	CARBON 1/4W 2.2K	
R810	ERDS2TJ101	CARBON 1/4W 100	
R811	ERDS2TJ103	CARBON 1/4W 10K	
R812	VRESC2TK825T	CARBON 1/2W 8.2M	⚠
R813	ERDS2TJ124	CARBON 1/4W 120K	
R815	ERDS2TJ223	CARBON 1/4W 22K	
R7001	ERDS2TJ102	CARBON 1/4W 1K	
R7002	ERDS2TJ102	CARBON 1/4W 1K	
R7003	ERDS2TJ102	CARBON 1/4W 1K	
R7004	ERDS2TJ102	CARBON 1/4W 1K	
R7005	ERDS2T0T	CARBON 1/4W 0	
R7006	ERDS2TJ271	CARBON 1/4W 270	
R7007	ERDS2TJ102	CARBON 1/4W 1K	
R7008	ERDS2TJ102	CARBON 1/4W 1K	

CAPACITORS

Ref. No.	Part No.	Part Name & Description	Remarks
C501	ECQB1H473KM3	POLYESTER 50V 0.047UF	
C510	ECKR2H681KB5	CERAMIC 500V 680PF	
C513	ECA1HM100B	ELECTROLYTIC 50V 10UF	
C524	ECKC3D561KBP	CERAMIC 2KV 560PF	⚠
C524	ECKW3D561KBP	CERAMIC 2KV 560PF	⚠
C531	ECA1HM3R3B	ELECTROLYTIC 50V 3.3UF	
C553	ECKR2H221KB5	CERAMIC 500V 220PF	
C554	ECWH12H682JS	POLYESTER 120V 6800PF	⚠
C554	ECWH16682JVB	POLYESTER 1250V 6800PF	⚠
C556	ECWF2564JBP	POLYESTER 250V 0.56UF	⚠
C556	ECWF2564JSB	POLYESTER 250V 0.56UF	⚠
C558	ECA1VM101B	ELECTROLYTIC 35V 100UF	
C560	ECA2EM100E	ELECTROLYTIC 250V 10UF	⚠
C560	ECA2EM100B	ELECTROLYTIC 250V 10UF	⚠
C560	ECEA2EU100	ELECTROLYTIC 250V 10UF	⚠
C561	ECA1HM4R7B	ELECTROLYTIC 50V 4.7UF	
C563	ECEA180V33WE	ELECTROLYTIC 180V 33UF	
C571	ECA1HM3R3B	ELECTROLYTIC 50V 3.3UF	
C573	ECKR2H122KB5	CERAMIC 50V 1200PF	
C581	ECWH12H682JS	POLYESTER 120V 6800PF	⚠
C581	ECWH16682JVB	POLYESTER 1250V 6800PF	⚠
C801	VCKSRNG472ZX	CERAMIC 250V 4700PF	

Ref. No.	Part No.	Part Name & Description	Remarks
C802	VCKSRNG472ZX	CERAMIC 250V 4700PF	
C803	VCKSRNG472ZX	CERAMIC 250V 4700PF	
C804	VCKSRNG472ZX	CERAMIC 250V 4700PF	
C805	ECOS2DP681BB	ELECTROLYTIC 220V 680UF	⚠
C806	ECA2EM330E	ELECTROLYTIC 250V 33UF	
C807	ECKATS103MF	CERAMIC 250V 0.01UF	⚠
C807	ECKETS103MF	CERAMIC 125V 0.01UF	⚠
C807	VCKST3G103ZY	CERAMIC 125V 0.01UF	⚠
C807	VCKSU3D103MY	CERAMIC 125V 0.01UF	⚠
C808	ECQU2A823MLA	POLYESTER 250V 0.082UF	⚠
C808	LSCFQ2A823MC	POLYESTER 250V 0.082UF	⚠
C809	J0LE00000023	ARRESTER	⚠
C812	ECKATS222ME	CERAMIC 250V 2200PF	⚠
C812	ECKETS222ME	CERAMIC 250V 2200PF	⚠
C812	VCKST4D222MX	CERAMIC 250V 2200PF	⚠
C812	VCKST5D222MX	CERAMIC 250V 2200PF	⚠
C812	VCKSU4D222MX	CERAMIC 125V 2200PF	⚠
C812	VCKSU5D222MX	CERAMIC 125V 2200PF	⚠
C813	ECKATS222ME	CERAMIC 250V 2200PF	⚠
C813	ECKETS222ME	CERAMIC 250V 2200PF	⚠
C813	VCKST4D222MX	CERAMIC 250V 2200PF	⚠
C813	VCKST5D222MX	CERAMIC 250V 2200PF	⚠
C813	VCKSU4D222MX	CERAMIC 125V 2200PF	⚠
C813	VCKSU5D222MX	CERAMIC 125V 2200PF	⚠
C7002	ECKR1H102KB	CERAMIC 50V 0.001UF	
C7006	ECA0JM102B	ELECTROLYTIC 6.3V 1000UF	
C7008	ECKR1H103ZF5	CERAMIC 50V 0.01UF	
C7010	ECEA1CKA100	ELECTROLYTIC 16V 10UF	
C7012	ECJ2VB1H102K	C CHIP 50V 1000PF	

COILS

Ref. No.	Part No.	Part Name & Description	Remarks
L501	LLH6602T	COIL	⚠
L801	ELF21V020A	LINE FILTER	⚠
L802	G0A220G00023	COIL 22UH	
L803	ELF21V020A	LINE FILTER	⚠
L7002	VLQSAB7D100K	COIL 10UH	

PIN HEADERS

Ref. No.	Part No.	Part Name & Description	Remarks
P551	K1KB19A00007	CONNECTOR 19P	
P552	K1MP04A00007	4P WIRE TRAP	
P801	LSJP0814	CONNECTOR 2P	
P7004	VJSS0875	CONNECTOR RECEPTACLE 13P	

FUSE& PROTECTOR

Ref. No.	Part No.	Part Name & Description	Remarks
F801	K5D402AD0001	FUSE 125V 4A	⚠ <R>

RELAY

Ref. No.	Part No.	Part Name & Description	Remarks
RL801	LSSY0004	RELAY	⚠ <R>
RL801	K6B1AGA00042	RELAY,120V	⚠ <R>
RL801	TSEH0013	RELAY	⚠ <R>
RL801	TSEH1860-1	RELAY	⚠ <R>
RL801	TSEH8007	RELAY,120V	⚠ <R>

TRANSFORMER

Ref. No.	Part No.	Part Name & Description	Remarks
T501	ETH19Y70AY	TRANSFORMER	<R>
T502	ETE16Z37AY	TRANSFORMER	⚠ <R>
T551	KFT4AB408F	FLYBACK TRANSFORMER	⚠ <R>

PRINTED CIRCUIT BOARD ASSEMBLY

Ref. No.	Part No.	Part Name & Description	Remarks
E41	LRP63019D	VERTICAL C.B.A.	<R>
E42	LRP63013C	CRT C.B.A.	<R>

MISCELLANEOUS

Ref. No.	Part No.	Part Name & Description	Remarks
154	TMM5439-1	CLAMPER	
272	TMM77412	CLAMPER	
293	TMM76455	PURSE LOCK CLAMPER	
483	XYN3+F10S	SCREW W/WASHER,STEEL	
484	XTW3+10J	TAPPING SCREW,STEEL	
741	LSJA0447	AC CORD W/PLUG,120V	⚠
742	K3GE1ZB00003	FUSE HOLDER	
743	ENG36709GL	TUNER,UHF/VHF NR	
751	LML69001A	ANODE LEAD CLAMPER	
759	TUC77627	HEAT SINK	
760	TUC77628	HEAT SINK	

12.3.5. VERTICAL C.B.A.

INTEGRATED CIRCUITS

Ref. No.	Part No.	Part Name & Description	Remarks
IC451	C1AA00000024	IC, LINEAR	<R>

TRANSISTORS

Ref. No.	Part No.	Part Name & Description	Remarks
Q431	2SA733-TQ	TRANSISTOR SI PNP	
Q431	2SA1175	TRANSISTOR SI PNP	
Q431	2SA1175-TH	TRANSISTOR SI PNP	
Q432	2SC3311ARA	TRANSISTOR SI NPN	
Q433	2SB1322ARA	TRANSISTOR SI PNP	
Q433	2SB1322ASA	TRANSISTOR SI PNP	
Q434	2SC3311ARA	TRANSISTOR SI NPN	
Q502	2SC945A-TQ	TRANSISTOR SI NPN	
Q502	2SC2785-TH	TRANSISTOR SI NPN	
Q502	2SC2785-TJ	TRANSISTOR SI NPN	
Q541	2SA733-TQ	TRANSISTOR SI PNP	
Q541	2SA1175	TRANSISTOR SI PNP	
Q541	2SA1175-TH	TRANSISTOR SI PNP	
Q542	2SC945A-TQ	TRANSISTOR SI NPN	
Q542	2SC2785-TH	TRANSISTOR SI NPN	
Q542	2SC2785-TJ	TRANSISTOR SI NPN	

DIODES

Ref. No.	Part No.	Part Name & Description	Remarks
D401	B0EAKL000049	DIODE SI	
D401	B0EAKL000044	DIODE SI	
D401	B0EAKL000045	DIODE SI	
D502	MA2C165001VT	DIODE SI	
D502	B0AACK000004	DIODE SI	
D502	1SS119	DIODE SI	
D504	MAZ40470MF	DIODE ZENER 4.7V	
D504	MAZ40470HF	DIODE ZENER 4.7V	
D504	RD4.7ESAB	DIODE ZENER 4.7V	
D504	RD4.7ESAB2	DIODE ZENER 4.7V	
D504	04AZ4.7ZTPA7	DIODE ZENER 4.7V	
D506	MA2C165001VT	DIODE SI	
D506	B0AACK000004	DIODE SI	
D506	1SS119	DIODE SI	
D541	MA2C165001VT	DIODE SI	
D541	B0AACK000004	DIODE SI	
D541	1SS119	DIODE SI	
D542	MAZ41500MF	DIODE ZENER 15V	
D543	MA2C165001VT	DIODE SI	
D543	B0AACK000004	DIODE SI	
D543	1SS119	DIODE SI	
D544	ERB43-04V	DIODE SI	
D544	B0HAJP000012	DIODE SI	

RESISTORS

Ref. No.	Part No.	Part Name & Description	Remarks
R401	ERDS2TJ561	CARBON 1/4W 560	
R402	ERDS2TJ103	CARBON 1/4W 10K	
R405	ERG2SJ561H	METAL OXIDE 2W 560	
R406	ERDS2TJ334	CARBON 1/4W 330K	
R409	ERJ6GEYJ273V	MGF CHIP 1/10W 27K	
R410	ERDS2TJ272	CARBON 1/4W 2.7K	
R411	ERDS2TJ104	CARBON 1/4W 100K	
R413	ERJ6GEYJ333V	MGF CHIP 1/10W 33K	
R414	ERX1SJ1R2P	METAL OXIDE 1W 1.2	⚠
R422	ERD25FJ101P	CARBON 1/4W 100	⚠
R427	ERQ14AJ5R6P	FUSE 1/4W 5.6	⚠
R431	ERDS2TJ103	CARBON 1/4W 10K	
R432	ERJ6GEYJ563V	MGF CHIP 1/10W 56K	
R433	ERJ6GEYJ472V	MGF CHIP 1/10W 4.7K	
R434	ERDS2TJ103	CARBON 1/4W 10K	
R435	ERDS2TJ102	CARBON 1/4W 1K	
R436	ERJ6GEYJ104V	MGF CHIP 1/10W 100K	
R466	ERJ6GEYJ683V	MGF CHIP 1/10W 68K	
R468	ERDS2TJ102	CARBON 1/4W 1K	
R469	ERDS2TJ222	CARBON 1/4W 2.2K	
R470	ERDS2TJ222	CARBON 1/4W 2.2K	
R471	ERDS2TJ561	CARBON 1/4W 560	
R472	ERDS2TJ561	CARBON 1/4W 560	
R473	ERDS2TJ101	CARBON 1/4W 100	
R474	ERDS1TJ102	CARBON 1/2W 1K	
R475	ERDS1TJ102	CARBON 1/2W 1K	
R476	ERDS2TJ561	CARBON 1/4W 560	
R477	ERDS2TJ102	CARBON 1/4W 1K	
R478	ERDS2TJ332	CARBON 1/4W 3.3K	
R480	ERDS1TJ391	CARBON 1/2W 390	
R481	ERDS1TJ122	CARBON 1/2W 1.2K	
R482	ERDS2TJ150	CARBON 1/4W 15	
R486	ERDS2TJ561	CARBON 1/4W 560	
R487	ERDS1TJ122	CARBON 1/2W 1.2K	
R503	ER0S2THF8251	PRECISION METAL FILM 1/4W 8.25K	⚠
R509	ERDS2TJ101	CARBON 1/4W 100	
R510	ERDS2TJ472	CARBON 1/4W 4.7K	
R515	ERJ6GEYJ563V	MGF CHIP 1/10W 56K	
R519	ERDS2TJ123	CARBON 1/4W 12K	
R520	ERDS2TJ562	CARBON 1/4W 5.6K	
R523	ERJ6GEYJ103V	MGF CHIP 1/10W 10K	
R524	ERDS2TJ223	CARBON 1/4W 22K	
R525	ERDS2TJ222	CARBON 1/4W 2.2K	
R541	ERDS2TJ473	CARBON 1/4W 47K	
R542	ERDS2TJ103	CARBON 1/4W 10K	
R543	ERDS2TJ472	CARBON 1/4W 4.7K	
R545	ERDS2TJ331	CARBON 1/4W 330	
R546	ERDS2TJ103	CARBON 1/4W 10K	
R547	ERJ6GEYJ153V	MGF CHIP 1/10W 15K	
R548	ERDS2TJ104	CARBON 1/4W 100K	

CAPACITORS

Ref. No.	Part No.	Part Name & Description	Remarks
C401	ECEA1HGE2R2	ELECTROLYTIC 50V 2.2UF	
C402	ECA1CM471B	ELECTROLYTIC 16V 470UF	
C408	ECA1HGE010KB	ELECTROLYTIC 50V 1UF	
C409	ECA1VM101B	ELECTROLYTIC 35V 100UF	
C413	ECQB1H104KF	POLYESTER 50V 0.1UF	
C414	ECA1CM222E	ELECTROLYTIC 16V 2200UF	
C418	ECA1VM221B	ELECTROLYTIC 35V 220UF	
C458	ECQB1H103KM	POLYESTER 50V 0.01UF	
C541	ECA1HM100B	ELECTROLYTIC 50V 10UF	
C543	ECA1HM100B	ELECTROLYTIC 50V 10UF	

PIN HEADERS

Ref. No.	Part No.	Part Name & Description	Remarks
P451	VJHS0291	PIN HEADER 11P	
P452	VJHS0299	PACK PIN 9P	

MISCELLANEOUS

Ref. No.	Part No.	Part Name & Description	Remarks
272	TMM77412	CLAMPER	
483	XYN3+F10S	SCREW W/WASHER,STEEL	
713	VMAS1912	P.C.B. SUPPORT ANGLE	
765	LSSC0254	HEAT SINK	

12.3.6. CRT C.B.A.

INTEGRATED CIRCUITS

Ref. No.	Part No.	Part Name & Description	Remarks
IC351	TDA6103Q	IC, LINEAR	<R>

DIODES

Ref. No.	Part No.	Part Name & Description	Remarks
D352	B0AAGP000004	DIODE SI	
D353	B0AAGP000004	DIODE SI	
D354	B0AAGP000004	DIODE SI	

RESISTORS

Ref. No.	Part No.	Part Name & Description	Remarks
R354	ERD25TJ272	CARBON 1/4W 2.7K	
R355	ERD25TJ272	CARBON 1/4W 2.7K	
R356	ERD25TJ272	CARBON 1/4W 2.7K	
R357	ERG1SJ104P	METAL OXIDE 1W 100K	
R359	ERG1SJ104P	METAL OXIDE 1W 100K	
R361	ERG1SJ104P	METAL OXIDE 1W 100K	
R363	ERDS2TJ471	CARBON 1/4W 470	
R364	ERDS2TJ222	CARBON 1/4W 2.2K	
R365	ERDS2TJ471	CARBON 1/4W 470	
R366	ERDS2TJ222	CARBON 1/4W 2.2K	
R367	ERDS2TJ471	CARBON 1/4W 470	
R368	ERDS2TJ222	CARBON 1/4W 2.2K	
R369	ERDS2TJ222	CARBON 1/4W 2.2K	
R370	ERDS2TJ222	CARBON 1/4W 2.2K	
R371	ERDS2TJ222	CARBON 1/4W 2.2K	
R372	ERDS2TJ222	CARBON 1/4W 2.2K	
R373	ERDS2TJ222	CARBON 1/4W 2.2K	
R374	ERDS2TJ222	CARBON 1/4W 2.2K	
R375	ERDS2TJ102	CARBON 1/4W 1K	
R376	ERDS2TJ473	CARBON 1/4W 47K	
R377	ERDS2TJ103	CARBON 1/4W 10K	
R378	ERDS2TJ104	CARBON 1/4W 100K	
R379	ERDS2TJ124	CARBON 1/4W 120K	
R380	ERDS2TJ472	CARBON 1/4W 4.7K	

CAPACITORS

Ref. No.	Part No.	Part Name & Description	Remarks
C354	F1B3D1020008	CERAMIC 2KV 1000PF	
C361	F1D1H100A015	CERAMIC 50V 10PF	
C363	F1D1H100A015	CERAMIC 50V 10PF	
C364	ECEA1HKAR22	ELECTROLYTIC 50V 0.22UF	
C365	ECEA1CKN100	ELECTROLYTIC 16V 10UF	
C366	ECA2EM4R7B	ELECTROLYTIC 250V 4.7UF	

PIN HEADERS

Ref. No.	Part No.	Part Name & Description	Remarks
P351	VJWS4MS520IC	CONNECTOR 4P	<R>
P352	VJWS4NS400IC	PARALLEL CONNECTOR 4P	<R>
P353	K3B10CA00040	CRT SOCKET	

MISCELLANEOUS

Ref. No.	Part No.	Part Name & Description	Remarks
153	TMM7443-1	CLAMPER	
488	XYN3+F6S	SCREW W/WASHER,STEEL	
762	TUC76649-4	HEAT SINK	

12.3.7. POWER SUPPLY C.B.A.

INTEGRATED CIRCUITS

Ref. No.	Part No.	Part Name & Description	Remarks
IC1001	0N3131-R.KT	IC, LINEAR	⚠ <R>
IC1001	0N3131-S.KT	IC, LINEAR	⚠ <R>
IC1002	TA76431ASTP6	IC, LINEAR	<R>
IC1002	B1AZKD000001	IC, LINEAR	<R>
IC1002	C0DAEMZ00001	IC, LINEAR	<R>
IC1501	C5HABZZ00101	IC, LINEAR	⚠ <R>
IC1502	0N3131-R.KT	IC, LINEAR	⚠ <R>
IC1502	0N3131-S.KT	IC, LINEAR	⚠ <R>
IC1503	TA76431ASTP6	IC, LINEAR	<R>
IC1503	B1AZKD000001	IC, LINEAR	<R>
IC1503	C0DAEMZ00001	IC, LINEAR	<R>
IC1504	C0DAZJG00019	IC, LINEAR	<R>
IC4751	T0TX178A	IC, CMOS STANDARD LOGIC	<R>

TRANSISTORS

Ref. No.	Part No.	Part Name & Description	Remarks
Q1001	2SC4533LP.KT	TRANSISTOR SI NPN	⚠
Q1001	2SC5130LF608	TRANSISTOR SI NPN	⚠
Q1002	2SD1458	TRANSISTOR SI NPN	
Q1002	2SD225900A	TRANSISTOR SI NPN	
Q1051	2SD2375-PQ	TRANSISTOR SI NPN	
Q1051	B1BACG000020	TRANSISTOR SI NPN	
Q1051	2SD2396-K	TRANSISTOR SI NPN	
Q1052	2SD601-RS	TRANSISTOR SI NPN CHIP	
Q1052	B1ABCF000011	TRANSISTOR SI NPN CHIP	
Q1053	2SD235800A	TRANSISTOR SI NPN CHIP	
Q1053	B1AAQB000002	TRANSISTOR SI NPN CHIP	
Q1501	2SD0601A0L	TRANSISTOR SI NPN CHIP	
Q1501	B1ABCF000011	TRANSISTOR SI NPN CHIP	
Q1502	XP132A1275SR	TRANSISTOR FET	

DIODES

Ref. No.	Part No.	Part Name & Description	Remarks
D1001	B0EDKR000004	DIODE SI	⚠
D1002	B0AAGP000001	DIODE SI	
D1002	B0HAJP000007	DIODE SI	
D1003	B0AAGP000001	DIODE SI	
D1005	B0AAGP000001	DIODE SI	
D1005	B0HAJP000007	DIODE SI	
D1006	ERC30-01L3	DIODE SI	
D1006	B0HANL000012	DIODE SI	
D1008	ERB81-004V1	DIODE SI	
D1008	B0JAME000049	DIODE SI	
D1015	MA2180LA	DIODE ZENER 18V	⚠
D1015	1N4746A-T	DIODE ZENER 18V	⚠
D1015	1N4746ARL	DIODE ZENER 18V	⚠
D1016	MA2C165001VT	DIODE SI	
D1016	B0AACK000004	DIODE SI	
D1016	1SS119	DIODE SI	
D1052	MA4100N	DIODE ZENER 10V	
D1052	RD10JSAB3	DIODE ZENER 10V	
D1053	MA2C165001VT	DIODE SI	
D1053	B0AACK000004	DIODE SI	
D1053	1SS119	DIODE SI	
D1054	MA2C165001VT	DIODE SI	
D1054	B0AACK000004	DIODE SI	
D1054	1SS119	DIODE SI	
D1501	B0EDKR000004	DIODE SI	⚠
D1502	B0JAMD000012	DIODE SI	
D1502	1GWJ43TPA3	DIODE SI	
D1503	B0HAJL000001	DIODE SI	
D1503	B0HAGP000004	DIODE SI	
D1504	B0HAJL000001	DIODE SI	
D1504	B0HAGP000004	DIODE SI	
D1505	B0HAJL000001	DIODE SI	
D1505	B0HAGP000004	DIODE SI	
D1506	B0HAJL000001	DIODE SI	
D1506	B0HAGP000004	DIODE SI	
D1507	B0AAGP000001	DIODE SI	
D1507	B0HAJP000007	DIODE SI	
D1508	ERB32-01L3	DIODE SI	
D1508	B0HAML000014	DIODE SI	
D1508	RGP15GL-5008	DIODE SI	
D1509	ERC81-006L7	DIODE SI	
D1509	B0JAPG000021	DIODE SI	
D1509	RK46LF015302	DIODE SI	
D4703	MA2C165001VT	DIODE SI	
D4703	B0AACK000004	DIODE SI	
D4703	1SS119	DIODE SI	
D4704	MA2C165001VT	DIODE SI	
D4704	B0AACK000004	DIODE SI	
D4704	1SS119	DIODE SI	

RESISTORS

Ref. No.	Part No.	Part Name & Description	Remarks
R1001	ERJ6GEYJ222V	MGF CHIP 1/10W 2.2K	
R1002	ERJ6GEYJ221V	MGF CHIP 1/10W 220	
R1003	D0AF334JA038	CARBON 1/2W 330K	
R1004	ERG2SJ333H	METAL OXIDE 2W 33K	
R1005	ERG1SJ560P	METAL OXIDE 1W 56	
R1006	ERJ6GEYJ222V	MGF CHIP 1/10W 2.2K	
R1007	ERJ6GEYJ101V	MGF CHIP 1/10W 100	
R1008	ERJ6GEYJ392V	MGF CHIP 1/10W 3.9K	
R1009	ERJ6GEYJ102V	MGF CHIP 1/10W 1K	
R1010	ERD25FJ100P	CARBON 1/4W 10	⚠
R1010	ERD25FPJ100P	CARBON 1/4W 10	⚠
R1010	VRESF4FJ100P	CARBON 1/4W 10	⚠
R1012	D1BD2431A016	MGF CHIP 1/10W 2.43K	
R1013	D0HD222ZA002	MGF CHIP 1/10W 2.2K	
R1025	D0AF150JA038	CARBON 1/2W 15	
R1051	ERDS2TJ331	CARBON 1/4W 330	
R1053	ERDS2TJ153	CARBON 1/4W 15K	
R1054	ERDS2TJ153	CARBON 1/4W 15K	
R1055	ERJ6GEYJ104V	MGF CHIP 1/10W 100K	
R1057	ERJ6GEYJ472V	MGF CHIP 1/10W 4.7K	
R1501	D0AF473JA038	CARBON 1/2W 47K	
R1502	ERD2FCG681V	FUSE 1/4W 680	⚠
R1504	ERX2SJR22P	METAL FILM 2W 0.22	
R1505	ERJ6GEYJ332V	MGF CHIP 1/10W 3.3K	
R1507	ERJ6GEYJ182V	MGF CHIP 1/10W 1.8K	
R1508	ERG2SJ104P	METAL OXIDE 2W 100K	
R1510	ERDS2TJ100	CARBON 1/4W 10	
R1511	ERJ6GEYJ222V	MGF CHIP 1/10W 2.2K	
R1512	ERJ6GEYJ102V	MGF CHIP 1/10W 1K	
R1513	ERJ6GEYJ221V	MGF CHIP 1/10W 220	
R1514	D1BD2431A016	MGF CHIP 1/10W 2.43K	
R1515	D0HD222ZA002	MGF CHIP 1/10W 2.2K	
R1516	ERJ6GEY0R00V	MGF CHIP 1/10W 0	
R1518	ERJ6GEYJ104V	MGF CHIP 1/10W 100K	
R1519	ERJ6GEYJ473V	MGF CHIP 1/10W 47K	
R1520	ERJ6GEYJ102V	MGF CHIP 1/10W 1K	
R1521	ERJ6GEYJ473V	MGF CHIP 1/10W 47K	
R1526	ERJ14YJ181H	MGF CHIP 1/4W 180	
R1527	ERJ14YJ181H	MGF CHIP 1/4W 180	
R1605	ERJ6GEYJ331V	MGF CHIP 1/10W 330	

CAPACITORS

Ref. No.	Part No.	Part Name & Description	Remarks
C1002	ECKATS332ME8	CERAMIC 250V 3300PF	⚠
C1002	ECKDNB332ME8	CERAMIC 125V 3300PF	⚠
C1002	ECKETS332ME8	CERAMIC 125V 3300PF	⚠
C1002	VCKST3G332MX	CERAMIC 250V 3300PF	⚠
C1002	VCKSU3D332MX	CERAMIC 125V 3300PF	⚠
C1003	ECKETS222ME	CERAMIC 250V 2200PF	⚠
C1003	ECKATS222ME	CERAMIC 250V 2200PF	⚠
C1003	VCKSTJG222MX	CERAMIC 250V 2200PF	⚠
C1003	VCKSTLG222MX	CERAMIC 250V 2200PF	⚠
C1003	VCKSU4D222MX	CERAMIC 125V 2200PF	⚠
C1003	VCKSU5D222MX	CERAMIC 125V 2200PF	⚠
C1004	ECEA2DU121YE	ELECTROLYTIC 200V 120UF	⚠
C1004	F2A2D1210003	ELECTROLYTIC 200V 120UF	⚠
C1004	VCESR2D121XE	ELECTROLYTIC 200V 120UF	⚠
C1005	ECA2DHG4R7B	ELECTROLYTIC 200V 4.7UF	
C1006	ECKR2H221KB5	CERAMIC 500V 220PF	
C1007	ECJ2VB1C224K	C CHIP 16V 0.22UF	
C1009	VCYSBRE183KX	CERAMIC 25V 0.018UF	
C1010	ECJ2VB1H102K	C CHIP 50V 1000PF	
C1011	ECA1HHG470B	ELECTROLYTIC 50V 47UF	
C1012	ECEA1PEE331	ELECTROLYTIC 18V 330UF	
C1013	ECA1EM331B	ELECTROLYTIC 25V 330UF	
C1016	ECEA1PEE331	ELECTROLYTIC 18V 330UF	
C1017	ECA0JM102B	ELECTROLYTIC 6.3V 1000UF	
C1020	ECKETS222ME	CERAMIC 250V 2200PF	⚠
C1020	ECKATS222ME	CERAMIC 250V 2200PF	⚠
C1020	VCKSTJG222MX	CERAMIC 250V 2200PF	⚠
C1020	VCKSTLG222MX	CERAMIC 250V 2200PF	⚠
C1020	VCKSU4D222MX	CERAMIC 125V 2200PF	⚠
C1020	VCKSU5D222MX	CERAMIC 125V 2200PF	⚠
C1021	ECJ2VB1E104K	C CHIP 25V 0.1UF	
C1024	ECKDRS101MBY	CERAMIC 125V 100PF	⚠
C1024	ECKATS101MB	CERAMIC 250V 100PF	⚠
C1024	ECKETS101MB	CERAMIC 125V 100PF	⚠
C1024	ECKMRS101MBY	CERAMIC 125V 100PF	⚠
C1024	VCKSTJG101KW	CERAMIC 125V 100PF	⚠
C1024	VCKSTLG101KW	CERAMIC 125V 100PF	⚠
C1024	VCKSUJD101KW	CERAMIC 125V 100PF	⚠
C1024	VCKSULD101KW	CERAMIC 125V 100PF	⚠
C1025	ECKDRS101MBY	CERAMIC 125V 100PF	⚠
C1025	ECKATS101MB	CERAMIC 250V 100PF	⚠
C1025	ECKETS101MB	CERAMIC 125V 100PF	⚠
C1025	ECKMRS101MBY	CERAMIC 125V 100PF	⚠
C1025	VCKSTJG101KW	CERAMIC 125V 100PF	⚠
C1025	VCKSTLG101KW	CERAMIC 125V 100PF	⚠
C1025	VCKSUJD101KW	CERAMIC 125V 100PF	⚠
C1025	VCKSULD101KW	CERAMIC 125V 100PF	⚠
C1027	ECKATS103MF	CERAMIC 250V 0.01UF	⚠

Ref. No.	Part No.	Part Name & Description	Remarks
C1027	ECKETS103MF	CERAMIC 125V 0.01UF	⚠
C1027	VCKST3G103MY	CERAMIC 250V 0.01UF	⚠
C1027	VCKSU3D103MY	CERAMIC 125V 0.01UF	⚠
C1029	ECJ2VC1H101J	C CHIP 50V 100PF	
C1030	VCYSBRE183KX	CERAMIC 25V 0.018UF	
C1032	ECA0JM221B	ELECTROLYTIC 6.3V 220UF	
C1051	ECEA1CKA100	ELECTROLYTIC 16V 10UF	
C1055	ECEA1CKA470	ELECTROLYTIC 16V 47UF	
C1059	ECEA0JEE101B	ELECTROLYTIC 6.3V 100UF	
C1061	ECEA1HKAR47	ELECTROLYTIC 50V 0.47UF	
C1063	ECEA1CKA100	ELECTROLYTIC 16V 10UF	
C1501	ECKATS152ME	CERAMIC 250V 1500PF	⚠
C1501	ECKETS152ME	CERAMIC 250V 1500PF	⚠
C1501	VCKST4D152MX	CERAMIC 250V 1500PF	⚠
C1501	VCKST5D152MX	CERAMIC 250V 1500PF	⚠
C1502	ECA1HHG220B	ELECTROLYTIC 50V 22UF	
C1503	ECJ2VC1H471J	C CHIP 50V 470PF	
C1504	ECEA2DU820YE	ELECTROLYTIC 200V 82UF	⚠
C1504	F2A2D8200003	ELECTROLYTIC 200V 82UF	⚠
C1504	VCESR2D820XE	ELECTROLYTIC 200V 82UF	⚠
C1505	F1B3D471A011	CERAMIC 2KV 470PF	
C1506	ECKR2H221KB5	CERAMIC 500V 220PF	
C1507	ECJ2VB1E104K	C CHIP 25V 0.1UF	
C1508	ECA2DHG4R7B	ELECTROLYTIC 200V 4.7UF	
C1509	ECJ2VB1H821K	C CHIP 50V 820PF	
C1510	ECEA1PEE331	ELECTROLYTIC 18V 330UF	
C1511	F2A0J2220018	ELECTROLYTIC 6.3V 2200UF	
C1512	ECJ2VB1E104K	C CHIP 25V 0.1UF	
C1513	ECA1CHG470B	ELECTROLYTIC 16V 47UF	
C1514	ECJ2YB1C334K	C CHIP 16V 0.33UF	
C1515	ECA0JFE102XE	ELECTROLYTIC 6.3V 1000UF	
C1516	ECEA1PEE331	ELECTROLYTIC 18V 330UF	
C1517	ECJ2VB1E104K	C CHIP 25V 0.1UF	
C1518	ECA1CM331B	ELECTROLYTIC 16V 330UF	
C1519	ECA0JFE102XE	ELECTROLYTIC 6.3V 1000UF	
C1520	ECJ2VB1H332K	C CHIP 50V 3300PF	
C1528	ECKATS152ME	CERAMIC 250V 1500PF	⚠
C1528	ECKETS152ME	CERAMIC 250V 1500PF	⚠
C1528	VCKST4D152MX	CERAMIC 250V 1500PF	⚠
C1528	VCKST5D152MX	CERAMIC 250V 1500PF	⚠
C1528	VCKSU4D152MX	CERAMIC 250V 1500PF	⚠
C1528	VCKSU5D152MX	CERAMIC 250V 1500PF	⚠
C1605	ECJ2VC1H270J	C CHIP 50V 27PF	
C1606	ECJ2VB1E104K	C CHIP 25V 0.1UF	
C1607	ECEA1EKA4R7	ELECTROLYTIC 25V 4.7UF	

COILS

Ref. No.	Part No.	Part Name & Description	Remarks
L1001	ELF21V018A	LINE NOISE FILTER	⚠
L1001	LLN63055A	COIL	⚠
L1002	VLQSAB7D220K	COIL 22UH	
L1003	VLQSAB7D100K	COIL 10UH	
L1006	VLPS0005A	COIL BEAD INDUCTOR	
L1009	ELEXT101KE04	COIL 100UH	
L1501	J0JHB0000021	FILTER	
L1502	J0JHB0000021	FILTER	
L1503	VLQS0165	COIL 22UH	
L1504	VLQSAB7D100K	COIL 10UH	
L1601	ERJ6GEY0R00V	MGF CHIP 1/10W 0	
L1603	ERJ6GEY0R00V	MGF CHIP 1/10W 0	
L1604	ELESN220KA	COIL 22UH	

PIN HEADERS

Ref. No.	Part No.	Part Name & Description	Remarks
P1001	K1KA02A00110	CONNECTOR 2P	
P1002	LSJWR7N370AC	CONNECTOR CABLE W/PLUG,DC 17V	
P1003	LSJWR8N180AC	CONNECTOR CABLE W/PLUG,DC 35V	
P1004	VEKS5825	CONNECTOR CABLE W/PLUG,0V	
P1501	VJSS0874	CONNECTOR 11P	
P1503	VEKS5801	CONNECTOR CABLE W/PLUG,DC12V	
P4701	K1KA04A00371	CONNECTOR 4P	

FUSE& PROTECTOR

Ref. No.	Part No.	Part Name & Description	Remarks
F1001	K5D302AQ0003	FUSE 125V 3A	⚠ <R>
F1001	K5D302ADA002	FUSE 125V 3A	⚠ <R>
F1001	K5D302AD0002	FUSE 125V 3A	⚠ <R>
PR1001	UNH000600A	IC PROTECTOR 1.5A	⚠ <R>
PR1001	B1ZAZ0000040	IC PROTECTOR 1.5A	⚠ <R>
PR1001	LSSF009A25E	IC PROTECTOR 1.5A	⚠ <R>
PR1002	UNH000600A	IC PROTECTOR 1.5A	⚠ <R>
PR1002	B1ZAZ0000040	IC PROTECTOR 1.5A	⚠ <R>
PR1002	LSSF009A25E	IC PROTECTOR 1.5A	⚠ <R>
PR1501	LSSF009A35E	IC PROTECTOR	⚠ <R>
PR1502	UNH000600A	IC PROTECTOR 1.5A	⚠ <R>
PR1502	B1ZAZ0000040	IC PROTECTOR 1.5A	⚠ <R>
PR1502	LSSF009A25E	IC PROTECTOR 1.5A	⚠ <R>

TRANSFORMER

Ref. No.	Part No.	Part Name & Description	Remarks
T1001	ETS28AD2J3AC	SW TRANSFORMER	⚠ <R>
T1001	LSTP0105	TRANSFORMER	⚠ <R>
T1001	VTPS0042	SW TRANSFORMER	⚠ <R>
T1501	LSTP0113	TRANSFORMER	⚠ <R>

JACKS

Ref. No.	Part No.	Part Name & Description	Remarks
JK4702	K2HA204B0102	AUDIO JACK SOCKET	

MISCELLANEOUS

Ref. No.	Part No.	Part Name & Description	Remarks
272	TMM77412	CLAMPER	
771	EYF52BC	FUSE HOLDER	

12.3.8. AUDIO AMP C.B.A.

INTEGRATED CIRCUITS

Ref. No.	Part No.	Part Name & Description	Remarks
IC4501	C1BA00000217	IC, LINEAR	<R>

TRANSISTORS

Ref. No.	Part No.	Part Name & Description	Remarks
Q4501	2SD13280TL	TRANSISTOR SI NPN CHIP	
Q4501	2SD13280SL	TRANSISTOR SI NPN CHIP	
Q4502	2SD13280TL	TRANSISTOR SI NPN CHIP	
Q4502	2SD13280SL	TRANSISTOR SI NPN CHIP	
Q4503	2SD2159-T	TRANSISTOR SI NPN	
Q4503	2SD1581-T	TRANSISTOR SI NPN	

DIODES

Ref. No.	Part No.	Part Name & Description	Remarks
D4501	MA2C165001VT	DIODE SI	
D4501	B0AACK000004	DIODE SI	
D4501	1SS119	DIODE SI	
D4502	MA2C165001VT	DIODE SI	
D4502	B0AACK000004	DIODE SI	
D4502	1SS119	DIODE SI	

RESISTORS

Ref. No.	Part No.	Part Name & Description	Remarks
R4501	ERJ6GEYJ683V	MGF CHIP 1/10W 68K	
R4502	ERJ6GEYJ683V	MGF CHIP 1/10W 68K	
R4503	ERJ6GEYJ562V	MGF CHIP 1/10W 5.6K	
R4504	ERJ6GEYJ562V	MGF CHIP 1/10W 5.6K	
R4505	ERJ6GEYJ102V	MGF CHIP 1/10W 1K	
R4506	ERJ6GEYJ102V	MGF CHIP 1/10W 1K	
R4507	ERJ6GEYJ104V	MGF CHIP 1/10W 100K	
R4508	ERJ6GEYJ104V	MGF CHIP 1/10W 100K	
R4509	ERJ6GEY0R00V	MGF CHIP 1/10W 0	
R4510	ERJ6GEY0R00V	MGF CHIP 1/10W 0	
R4513	ERJ6GEYJ151V	MGF CHIP 1/10W 150	
R4514	ERJ6GEYJ151V	MGF CHIP 1/10W 150	
R4515	ERJ6GEYJ103V	MGF CHIP 1/10W 10K	
R4516	ERJ6GEYJ103V	MGF CHIP 1/10W 10K	
R4519	ERDS2TJ4R7	CARBON 1/4W 4.7	
R4520	ERDS2TJ4R7	CARBON 1/4W 4.7	
R4521	ERDS2TJ4R7	CARBON 1/4W 4.7	
R4522	ERDS2TJ4R7	CARBON 1/4W 4.7	
R4523	ERJ6GEYJ561V	MGF CHIP 1/10W 560	

CAPACITORS

Ref. No.	Part No.	Part Name & Description	Remarks
C4501	ECA1CM101B	ELECTROLYTIC 16V 100UF	
C4502	ECA1CM101B	ELECTROLYTIC 16V 100UF	
C4503	ECJ2VB1H222K	C CHIP 50V 2200PF	
C4504	ECJ2VB1H222K	C CHIP 50V 2200PF	
C4505	ECJ2VB1H222K	C CHIP 50V 2200PF	
C4506	ECJ2VB1H222K	C CHIP 50V 2200PF	
C4507	ECA1HM4R7B	ELECTROLYTIC 50V 4.7UF	
C4508	ECA1HM4R7B	ELECTROLYTIC 50V 4.7UF	
C4509	ECA1EM470B	ELECTROLYTIC 25V 47UF	
C4510	ECA1EM470B	ELECTROLYTIC 25V 47UF	
C4511	ECQB1H104KF	POLYESTER 50V 0.1UF	
C4512	ECQB1H104KF	POLYESTER 50V 0.1UF	
C4513	ECA1CM102B	ELECTROLYTIC 16V 1000UF	
C4514	ECA1CM102B	ELECTROLYTIC 16V 1000UF	
C4515	ECA1EM101B	ELECTROLYTIC 25V 100UF	
C4516	ECA1EM102B	ELECTROLYTIC 25V 1000UF	
C4518	ECA1EM471B	ELECTROLYTIC 25V 470UF	
C4519	ECA1EM101B	ELECTROLYTIC 25V 100UF	
C4525	ECJ2VF1H103Z	C CHIP 50V 0.01UF	

COILS

Ref. No.	Part No.	Part Name & Description	Remarks
L4501	VLQSAB7D680K	COIL 68UH	

PIN HEADERS

Ref. No.	Part No.	Part Name & Description	Remarks
P4502	K1KA05A00268	CONNECTOR 5P	
P4503	K1KA02A00375	CONNECTOR 2P	
P4505	K1KA06A00308	CONNECTOR 6P	
P4506	VEKS5833	CONNECTOR CABLE W/PLUG,22V	
P4508	K1KA02A00375	CONNECTOR 2P	

MISCELLANEOUS

Ref. No.	Part No.	Part Name & Description	Remarks
483	XYN3+F10S	SCREW W/WASHER,STEEL	
484	XTW3+10J	TAPPING SCREW,STEEL	
753	LSSC0256	HEAT SINK	

12.3.9. OPERATION C.B.A.

DIODES

Ref. No.	Part No.	Part Name & Description	Remarks
D6381	B3AAA0000538	LIGHT EMITTING DIODE RED	
D6382	B3ABA0000400	LIGHT EMITTING DIODE GREEN	
D6383	B3ACA0000192	LIGHT EMITTING DIODE ORANGE	

RESISTORS

Ref. No.	Part No.	Part Name & Description	Remarks
R6381	ERDS2TJ123	CARBON 1/4W 12K	

CAPACITORS

Ref. No.	Part No.	Part Name & Description	Remarks
C6381	ECQB1H104KF	POLYESTER 50V 0.1UF	

PIN HEADERS

Ref. No.	Part No.	Part Name & Description	Remarks
P6381	VEKS5863	CONNECTOR CABLE W/PLUG	

SWITCHES

Ref. No.	Part No.	Part Name & Description	Remarks
SW6381	EVQ21405R	PUSH SWITCH	
SW6382	EVQ21405R	PUSH SWITCH	

MISCELLANEOUS

Ref. No.	Part No.	Part Name & Description	Remarks
711	LSSZ0004	INFRARED RECEIVER UNIT	<R>

12.3.10. AUDIO/VIDEO JACK C.B.A.

DIODES

Ref. No.	Part No.	Part Name & Description	Remarks
D4591	RD9.1EW	DIODE ZENER 9.1V	
D4592	MA2C165001VT	DIODE SI	
D4593	MA2C165001VT	DIODE SI	
D4789	MA2C165001VT	DIODE SI	
D4790	MA2C165001VT	DIODE SI	
D4797	MA2C165001VT	DIODE SI	
D4798	MA2C165001VT	DIODE SI	

RESISTORS

Ref. No.	Part No.	Part Name & Description	Remarks
R4591	ERDS2TJ681	CARBON 1/4W 680	
R4592	ERDS2TJ681	CARBON 1/4W 680	
R4593	ERDS2TJ681	CARBON 1/4W 680	
R4594	ERDS2TJ681	CARBON 1/4W 680	
R4791	ERDS2TJ750	CARBON 1/4W 75	
R4792	ERDS2TJ561	CARBON 1/4W 560	
R4793	ERDS2TJ561	CARBON 1/4W 560	

PIN HEADERS

Ref. No.	Part No.	Part Name & Description	Remarks
P4591	VEKS5834	CONNECTOR CABLE W/PLUG,10V	
P4791	LSJWR6N220AA	CONNECTOR CABLE W/PLUG,AC 6V	

JACKS

Ref. No.	Part No.	Part Name & Description	Remarks
JK4591	K2HC103B0129	FRONT AUDIO/VIDEO JACK SOCKET	
JK4791	K2HA306B0058	AUDIO/VIDEO JACK SOCKET	

MISCELLANEOUS

Ref. No.	Part No.	Part Name & Description	Remarks
JA	VEKS5824	GROUNDING WIRE	

12.3.11. DVD DECODER C.B.A.

INTEGRATED CIRCUITS

Ref. No.	Part No.	Part Name & Description	Remarks
IC8000	ES4318F	IC, 32BIT MICROCONTROLLER	E.S.D. <R>
IC8001	AT24C04N10SI	IC, 4K EEP ROM	E.S.D. <R>
IC8001	C3EBEC000031	IC, 4K EEP ROM	E.S.D. <R>
IC8001	S-24C04A	IC, 4K EEP ROM	E.S.D. <R>
IC8002	C0JBAF000480	IC, CMOS STANDARD LOGIC	E.S.D. <R>
IC8002	SN74AHCT374N	IC, CMOS STANDARD LOGIC	E.S.D. <R>
IC8003	C0DBZGG00002	IC, LINEAR	<R>
IC8100	C3ABPG000078	IC, 64MBIT SD RAM	E.S.D. <R>
IC8100	C3ABPG000067	IC, 64MBIT SD RAM	E.S.D. <R>
IC8100	C3ABPG000102	IC, 64MBIT SD RAM	E.S.D. <R>
IC8200	ADV7170KSU	IC, LINEAR	<R>
IC8201	C0CBABD00016	IC, LINEAR	<R>
IC8301	C3FBLD000084	IC, 8MBIT FLASH MEMORY	E.S.D. <R>
IC8301	C3FBLG000012	IC, 8MBIT FLASH MEMORY	E.S.D. <R>
IC8401	AN6552S-E1	IC, LINEAR	<R>
IC8403	PCM1723E-2K	IC, LINEAR	<R>
IC8502	C0JBAB000196	IC, CMOS STANDARD LOGIC	E.S.D. <R>

TRANSISTORS

Ref. No.	Part No.	Part Name & Description	Remarks
Q8000	2SB09560RL	TRANSISTOR SI PNP CHIP	
Q8200	2SB1218ARL	TRANSISTOR SI PNP CHIP	
Q8201	2SB1218ARL	TRANSISTOR SI PNP CHIP	
Q8202	2SB1218ARL	TRANSISTOR SI PNP CHIP	
Q8204	2SB1218ARL	TRANSISTOR SI PNP CHIP	
Q8205	2SB1218ARL	TRANSISTOR SI PNP CHIP	
Q8206	2SB1218ARL	TRANSISTOR SI PNP CHIP	

DIODES

Ref. No.	Part No.	Part Name & Description	Remarks
D8000	MAZ30510ML	DIODE ZENER 5.1V	
D8001	MAZ30510ML	DIODE ZENER 5.1V	
D8002	MAZ30510ML	DIODE ZENER 5.1V	
D8003	MAZ30510ML	DIODE ZENER 5.1V	

RESISTORS

Ref. No.	Part No.	Part Name & Description	Remarks
R8004	ERJ3GEYJ102V	MGF CHIP 1/16W 1K	
R8010	ERJ3GEYJ472V	MGF CHIP 1/16W 4.7K	
R8011	ERJ3GEYJ472V	MGF CHIP 1/16W 4.7K	
R8012	ERJ3GEYJ472V	MGF CHIP 1/16W 4.7K	
R8013	ERJ3GEYJ472V	MGF CHIP 1/16W 4.7K	
R8014	ERJ3GEYJ102V	MGF CHIP 1/16W 1K	
R8015	ERJ3GEYJ102V	MGF CHIP 1/16W 1K	
R8016	ERJ3GEY0R00V	MGF CHIP 1/16W 0	
R8017	ERJ3GEY0R00V	MGF CHIP 1/16W 0	
R8018	ERJ3GEY0R00V	MGF CHIP 1/16W 0	
R8019	ERJ3GEY0R00V	MGF CHIP 1/16W 0	
R8020	ERJ3GEY0R00V	MGF CHIP 1/16W 0	
R8021	ERJ3GEY0R00V	MGF CHIP 1/16W 0	
R8022	ERJ3GEY0R00V	MGF CHIP 1/16W 0	
R8023	ERJ3GEYJ470V	MGF CHIP 1/16W 47	
R8024	ERJ3GEY0R00V	MGF CHIP 1/16W 0	
R8025	ERJ3GEY0R00V	MGF CHIP 1/16W 0	
R8026	ERJ3GEY0R00V	MGF CHIP 1/16W 0	
R8027	ERJ3GEYJ330V	MGF CHIP 1/16W 33	
R8028	ERJ3GEYJ330V	MGF CHIP 1/16W 33	
R8029	ERJ3GEYJ330V	MGF CHIP 1/16W 33	
R8030	ERJ3GEYJ330V	MGF CHIP 1/16W 33	
R8031	ERJ3GEYJ330V	MGF CHIP 1/16W 33	
R8032	ERJ3GEYJ330V	MGF CHIP 1/16W 33	
R8033	ERJ3GEYJ330V	MGF CHIP 1/16W 33	
R8034	ERJ3GEYJ330V	MGF CHIP 1/16W 33	
R8035	ERJ3GEYJ330V	MGF CHIP 1/16W 33	
R8036	ERJ3GEYJ330V	MGF CHIP 1/16W 33	
R8037	ERJ3GEYJ330V	MGF CHIP 1/16W 33	
R8038	ERJ3GEYJ330V	MGF CHIP 1/16W 33	
R8039	ERJ3GEYJ330V	MGF CHIP 1/16W 33	
R8040	ERJ3GEYJ330V	MGF CHIP 1/16W 33	
R8041	ERJ3GEYJ330V	MGF CHIP 1/16W 33	
R8042	ERJ3GEYJ330V	MGF CHIP 1/16W 33	
R8043	ERJ3GEYJ330V	MGF CHIP 1/16W 33	
R8045	ERJ3GEYJ330V	MGF CHIP 1/16W 33	
R8047	ERJ3GEYJ330V	MGF CHIP 1/16W 33	
R8048	ERJ3GEYJ470V	MGF CHIP 1/16W 47	
R8049	ERJ1WYJ1R0U	MGF CHIP 1W 1	
R8050	ERJ3GEYJ820V	MGF CHIP 1/16W 82	
R8051	ERJ3GEYJ820V	MGF CHIP 1/16W 82	
R8052	ERJ3GEYJ820V	MGF CHIP 1/16W 82	
R8053	ERJ3GEYJ820V	MGF CHIP 1/16W 82	
R8054	ERJ3GEYJ820V	MGF CHIP 1/16W 82	
R8055	ERJ3GEYJ820V	MGF CHIP 1/16W 82	
R8056	ERJ3GEYJ820V	MGF CHIP 1/16W 82	
R8057	ERJ3GEYJ820V	MGF CHIP 1/16W 82	
R8058	ERJ3GEYJ470V	MGF CHIP 1/16W 47	
R8059	ERJ3GEYJ470V	MGF CHIP 1/16W 47	
R8060	ERJ3GEYJ470V	MGF CHIP 1/16W 47	
R8061	ERJ3GEYJ103V	MGF CHIP 1/16W 10K	
R8062	ERJ3GEYJ470V	MGF CHIP 1/16W 47	
R8063	ERJ3GEYJ470V	MGF CHIP 1/16W 47	
R8064	ERJ3GEYJ472V	MGF CHIP 1/16W 4.7K	

Ref. No.	Part No.	Part Name & Description	Remarks
R8065	ERJ3GEYJ472V	MGF CHIP 1/16W 4.7K	
R8066	ERJ3GEYJ103V	MGF CHIP 1/16W 10K	
R8067	ERJ3GEYJ470V	MGF CHIP 1/16W 47	
R8068	ERJ3GEYJ330V	MGF CHIP 1/16W 33	
R8069	ERJ3GEYJ330V	MGF CHIP 1/16W 33	
R8074	ERJ3GEYJ470V	MGF CHIP 1/16W 47	
R8076	ERJ3GEY0R00V	MGF CHIP 1/16W 0	
R8077	ERJ3GEY0R00V	MGF CHIP 1/16W 0	
R8082	ERJ3GEYJ220V	MGF CHIP 1/16W 22	
R8083	ERJ3GEYJ220V	MGF CHIP 1/16W 22	
R8084	ERJ3GEYJ220V	MGF CHIP 1/16W 22	
R8085	ERJ3GEYJ220V	MGF CHIP 1/16W 22	
R8086	ERJ3GEYJ220V	MGF CHIP 1/16W 22	
R8087	ERJ3GEYJ220V	MGF CHIP 1/16W 22	
R8088	ERJ3GEYJ220V	MGF CHIP 1/16W 22	
R8089	ERJ3GEYJ220V	MGF CHIP 1/16W 22	
R8090	ERJ3GEYJ220V	MGF CHIP 1/16W 22	
R8091	ERJ3GEYJ220V	MGF CHIP 1/16W 22	
R8092	ERJ3GEYJ220V	MGF CHIP 1/16W 22	
R8093	ERJ3GEYJ220V	MGF CHIP 1/16W 22	
R8094	ERJ3GEYJ220V	MGF CHIP 1/16W 22	
R8095	ERJ3GEYJ220V	MGF CHIP 1/16W 22	
R8096	ERJ3GEYJ220V	MGF CHIP 1/16W 22	
R8097	ERJ3GEYJ220V	MGF CHIP 1/16W 22	
R8098	ERJ3GEYJ220V	MGF CHIP 1/16W 22	
R8099	ERJ3GEYJ220V	MGF CHIP 1/16W 22	
R8101	ERJ3GEYJ100V	MGF CHIP 1/16W 10	
R8102	ERJ3GEYJ100V	MGF CHIP 1/16W 10	
R8103	ERJ3GEYJ100V	MGF CHIP 1/16W 10	
R8104	ERJ3GEYJ100V	MGF CHIP 1/16W 10	
R8105	ERJ3GEYJ100V	MGF CHIP 1/16W 10	
R8106	ERJ3GEYJ100V	MGF CHIP 1/16W 10	
R8107	ERJ3GEYJ100V	MGF CHIP 1/16W 10	
R8108	ERJ3GEYJ100V	MGF CHIP 1/16W 10	
R8109	ERJ3GEYJ100V	MGF CHIP 1/16W 10	
R8110	ERJ3GEYJ100V	MGF CHIP 1/16W 10	
R8111	ERJ3GEYJ100V	MGF CHIP 1/16W 10	
R8113	ERJ3GEYJ330V	MGF CHIP 1/16W 33	
R8115	ERJ3GEYJ330V	MGF CHIP 1/16W 33	
R8116	ERJ3GEYJ330V	MGF CHIP 1/16W 33	
R8117	ERJ3GEYJ330V	MGF CHIP 1/16W 33	
R8118	ERJ3GEYJ330V	MGF CHIP 1/16W 33	
R8119	ERJ3GEY0R00V	MGF CHIP 1/16W 0	
R8120	ERJ3GEY0R00V	MGF CHIP 1/16W 0	
R8123	ERJ3GEY0R00V	MGF CHIP 1/16W 0	
R8124	ERJ3GEY0R00V	MGF CHIP 1/16W 0	
R8125	ERJ3GEY0R00V	MGF CHIP 1/16W 0	
R8137	ERJ3GEYJ100V	MGF CHIP 1/16W 10	
R8143	ERJ3GEYJ100V	MGF CHIP 1/16W 10	
R8144	ERJ3GEYJ100V	MGF CHIP 1/16W 10	
R8145	ERJ3GEYJ100V	MGF CHIP 1/16W 10	
R8146	ERJ3GEYJ100V	MGF CHIP 1/16W 10	
R8147	ERJ3GEYJ100V	MGF CHIP 1/16W 10	
R8148	ERJ3GEYJ100V	MGF CHIP 1/16W 10	

Ref. No.	Part No.	Part Name & Description	Remarks
R8149	ERJ3GEYJ100V	MGF CHIP 1/16W 10	
R8150	ERJ3GEYJ100V	MGF CHIP 1/16W 10	
R8151	ERJ3GEYJ100V	MGF CHIP 1/16W 10	
R8152	ERJ3GEYJ100V	MGF CHIP 1/16W 10	
R8153	ERJ3GEYJ100V	MGF CHIP 1/16W 10	
R8154	ERJ3GEYJ100V	MGF CHIP 1/16W 10	
R8155	ERJ3GEYJ100V	MGF CHIP 1/16W 10	
R8156	ERJ3GEYJ100V	MGF CHIP 1/16W 10	
R8157	ERJ3GEYJ100V	MGF CHIP 1/16W 10	
R8158	ERJ3GEYJ100V	MGF CHIP 1/16W 10	
R8203	ERJ3GEYJ102V	MGF CHIP 1/16W 1K	
R8204	ERJ3GEYJ102V	MGF CHIP 1/16W 1K	
R8205	ERJ3GEYJ102V	MGF CHIP 1/16W 1K	
R8206	ERJ3GEYJ104V	MGF CHIP 1/16W 100K	
R8207	ERJ3GEYJ104V	MGF CHIP 1/16W 100K	
R8208	ERJ3GEYJ152V	MGF CHIP 1/16W 1.5K	
R8215	ERJ3GEYJ101V	MGF CHIP 1/16W 100	
R8216	ERJ3GEYJ101V	MGF CHIP 1/16W 100	
R8217	ERJ3GEYJ102V	MGF CHIP 1/16W 1K	
R8218	ERJ3GEYJ102V	MGF CHIP 1/16W 1K	
R8220	ERJ3GEYJ151V	MGF CHIP 1/16W 150	
R8221	ERJ3GEY0R00V	MGF CHIP 1/16W 0	
R8222	ERJ3GEYJ102V	MGF CHIP 1/16W 1K	
R8223	ERJ3GEYJ102V	MGF CHIP 1/16W 1K	
R8224	ERJ3GEYJ102V	MGF CHIP 1/16W 1K	
R8225	ERJ3GEYJ473V	MGF CHIP 1/16W 47K	
R8230	ERJ3GEYJ302V	MGF CHIP 1/16W 3K	
R8231	ERJ3GEYJ151V	MGF CHIP 1/16W 150	
R8232	ERJ3GEYJ302V	MGF CHIP 1/16W 3K	
R8233	ERJ3GEYJ151V	MGF CHIP 1/16W 150	
R8234	ERJ3GEYJ302V	MGF CHIP 1/16W 3K	
R8238	ERJ3GEYJ102V	MGF CHIP 1/16W 1K	
R8239	ERJ3GEYJ102V	MGF CHIP 1/16W 1K	
R8240	ERJ3GEYJ102V	MGF CHIP 1/16W 1K	
R8241	ERJ3GEY0R00V	MGF CHIP 1/16W 0	
R8292	ERJ8GEYJ1R0V	MGF CHIP 1/8W 1	
R8293	ERJ3GEYJ330V	MGF CHIP 1/16W 33	
R8294	ERJ3GEYJ330V	MGF CHIP 1/16W 33	
R8299	EVM3YSX50B23	VARIABLE 2K	
R8300	ERJ3GEYJ330V	MGF CHIP 1/16W 33	
R8301	ERJ3GEYJ330V	MGF CHIP 1/16W 33	
R8302	ERJ3GEYJ330V	MGF CHIP 1/16W 33	
R8304	ERJ3GEY0R00V	MGF CHIP 1/16W 0	
R8309	ERJ3GEYJ330V	MGF CHIP 1/16W 33	
R8310	ERJ3GEYJ330V	MGF CHIP 1/16W 33	
R8311	ERJ3GEYJ330V	MGF CHIP 1/16W 33	
R8312	ERJ3GEYJ330V	MGF CHIP 1/16W 33	
R8313	ERJ3GEYJ330V	MGF CHIP 1/16W 33	
R8314	ERJ3GEYJ330V	MGF CHIP 1/16W 33	
R8315	ERJ3GEYJ330V	MGF CHIP 1/16W 33	
R8316	ERJ3GEYJ330V	MGF CHIP 1/16W 33	
R8317	ERJ3GEYJ330V	MGF CHIP 1/16W 33	
R8318	ERJ3GEYJ330V	MGF CHIP 1/16W 33	
R8319	ERJ3GEYJ330V	MGF CHIP 1/16W 33	

Ref. No.	Part No.	Part Name & Description	Remarks
R8320	ERJ3GEYJ330V	MGF CHIP 1/16W 33	
R8321	ERJ3GEYJ330V	MGF CHIP 1/16W 33	
R8322	ERJ3GEYJ330V	MGF CHIP 1/16W 33	
R8323	ERJ3GEYJ330V	MGF CHIP 1/16W 33	
R8324	ERJ3GEYJ330V	MGF CHIP 1/16W 33	
R8326	ERJ3GEYJ330V	MGF CHIP 1/16W 33	
R8327	ERJ3GEYJ330V	MGF CHIP 1/16W 33	
R8328	ERJ3GEYJ330V	MGF CHIP 1/16W 33	
R8329	ERJ3GEYJ330V	MGF CHIP 1/16W 33	
R8330	ERJ3GEYJ330V	MGF CHIP 1/16W 33	
R8331	ERJ3GEYJ330V	MGF CHIP 1/16W 33	
R8332	ERJ3GEYJ330V	MGF CHIP 1/16W 33	
R8333	ERJ3GEYJ330V	MGF CHIP 1/16W 33	
R8334	ERJ3GEYJ330V	MGF CHIP 1/16W 33	
R8335	ERJ3GEYJ330V	MGF CHIP 1/16W 33	
R8336	ERJ3GEYJ330V	MGF CHIP 1/16W 33	
R8337	ERJ3GEYJ330V	MGF CHIP 1/16W 33	
R8338	ERJ3GEYJ621V	MGF CHIP 1/16W 620	
R8339	ERJ3GEYJ333V	MGF CHIP 1/16W 33K	
R8340	ERJ3GEYJ220V	MGF CHIP 1/16W 22	
R8341	ERJ3GEYJ220V	MGF CHIP 1/16W 22	
R8342	ERJ3GEYJ220V	MGF CHIP 1/16W 22	
R8343	ERJ3GEYJ220V	MGF CHIP 1/16W 22	
R8344	ERJ3GEYJ220V	MGF CHIP 1/16W 22	
R8345	ERJ3GEYJ220V	MGF CHIP 1/16W 22	
R8346	ERJ3GEYJ220V	MGF CHIP 1/16W 22	
R8347	ERJ3GEYJ220V	MGF CHIP 1/16W 22	
R8348	ERJ3GEYJ220V	MGF CHIP 1/16W 22	
R8349	ERJ3GEYJ220V	MGF CHIP 1/16W 22	
R8350	ERJ3GEYJ220V	MGF CHIP 1/16W 22	
R8351	ERJ3GEYJ220V	MGF CHIP 1/16W 22	
R8352	ERJ3GEYJ220V	MGF CHIP 1/16W 22	
R8353	ERJ3GEYJ220V	MGF CHIP 1/16W 22	
R8354	ERJ3GEYJ220V	MGF CHIP 1/16W 22	
R8355	ERJ3GEYJ220V	MGF CHIP 1/16W 22	
R8356	ERJ3GEYJ220V	MGF CHIP 1/16W 22	
R8357	ERJ3GEYJ220V	MGF CHIP 1/16W 22	
R8358	ERJ3GEYJ220V	MGF CHIP 1/16W 22	
R8359	ERJ3GEYJ220V	MGF CHIP 1/16W 22	
R8360	ERJ3GEYJ220V	MGF CHIP 1/16W 22	
R8361	ERJ3GEYJ220V	MGF CHIP 1/16W 22	
R8362	ERJ3GEYJ220V	MGF CHIP 1/16W 22	
R8363	ERJ3GEYJ220V	MGF CHIP 1/16W 22	
R8364	ERJ3GEYJ220V	MGF CHIP 1/16W 22	
R8365	ERJ3GEYJ220V	MGF CHIP 1/16W 22	
R8366	ERJ3GEYJ220V	MGF CHIP 1/16W 22	
R8367	ERJ3GEYJ220V	MGF CHIP 1/16W 22	
R8368	ERJ3GEYJ220V	MGF CHIP 1/16W 22	
R8369	ERJ3GEYJ220V	MGF CHIP 1/16W 22	
R8370	ERJ3GEYJ220V	MGF CHIP 1/16W 22	
R8371	ERJ3GEYJ220V	MGF CHIP 1/16W 22	
R8372	ERJ3GEYJ220V	MGF CHIP 1/16W 22	
R8373	ERJ3GEYJ220V	MGF CHIP 1/16W 22	
R8374	ERJ3GEYJ220V	MGF CHIP 1/16W 22	

Ref. No.	Part No.	Part Name & Description	Remarks
R8375	ERJ3GEYJ220V	MGF CHIP 1/16W 22	
R8376	ERJ3GEYJ220V	MGF CHIP 1/16W 22	
R8377	ERJ3GEYJ220V	MGF CHIP 1/16W 22	
R8378	ERJ3GEYJ220V	MGF CHIP 1/16W 22	
R8379	ERJ3GEYJ220V	MGF CHIP 1/16W 22	
R8380	ERJ3GEYJ220V	MGF CHIP 1/16W 22	
R8381	ERJ3GEYJ220V	MGF CHIP 1/16W 22	
R8382	ERJ3GEYJ220V	MGF CHIP 1/16W 22	
R8383	ERJ3GEYJ220V	MGF CHIP 1/16W 22	
R8384	ERJ3GEYJ220V	MGF CHIP 1/16W 22	
R8385	ERJ3GEYJ220V	MGF CHIP 1/16W 22	
R8386	ERJ3GEYJ220V	MGF CHIP 1/16W 22	
R8387	ERJ3GEYJ220V	MGF CHIP 1/16W 22	
R8388	ERJ3GEYJ220V	MGF CHIP 1/16W 22	
R8389	ERJ3GEYJ220V	MGF CHIP 1/16W 22	
R8390	ERJ3GEYJ220V	MGF CHIP 1/16W 22	
R8391	ERJ3GEYJ220V	MGF CHIP 1/16W 22	
R8392	ERJ3GEYJ220V	MGF CHIP 1/16W 22	
R8393	ERJ3GEYJ220V	MGF CHIP 1/16W 22	
R8394	ERJ3GEYJ220V	MGF CHIP 1/16W 22	
R8395	ERJ3GEYJ220V	MGF CHIP 1/16W 22	
R8396	ERJ3GEYJ220V	MGF CHIP 1/16W 22	
R8397	ERJ3GEYJ220V	MGF CHIP 1/16W 22	
R8398	ERJ3GEYJ220V	MGF CHIP 1/16W 22	
R8403	ERJ3GEYJ223V	MGF CHIP 1/16W 22K	
R8404	ERJ3GEYJ223V	MGF CHIP 1/16W 22K	
R8405	ERJ3GEYJ223V	MGF CHIP 1/16W 22K	
R8406	ERJ3GEYJ223V	MGF CHIP 1/16W 22K	
R8407	ERJ3GEYJ822V	MGF CHIP 1/16W 8.2K	
R8408	ERJ3GEYJ822V	MGF CHIP 1/16W 8.2K	
R8409	ERJ3GEYJ622V	MGF CHIP 1/16W 6.2K	
R8410	ERJ3GEYJ622V	MGF CHIP 1/16W 6.2K	
R8411	ERJ3EKF1502V	MGF CHIP 1/16W 15K	
R8412	ERJ3EKF1502V	MGF CHIP 1/16W 15K	
R8413	ERJ3GEYJ471V	MGF CHIP 1/16W 470	
R8414	ERJ3GEYJ471V	MGF CHIP 1/16W 470	
R8427	ERJ3GEYJ330V	MGF CHIP 1/16W 33	
R8429	ERJ3GEYJ101V	MGF CHIP 1/16W 100	
R8430	ERJ3GEYJ101V	MGF CHIP 1/16W 100	
R8431	ERJ3GEYJ473V	MGF CHIP 1/16W 47K	
R8432	ERJ3GEYJ473V	MGF CHIP 1/16W 47K	
R8433	ERJ3GEYJ330V	MGF CHIP 1/16W 33	
R8434	ERJ3GEYJ330V	MGF CHIP 1/16W 33	
R8435	ERJ3GEYJ330V	MGF CHIP 1/16W 33	
R8447	ERJ3GEYJ330V	MGF CHIP 1/16W 33	
R8500	ERJ3GEYJ473V	MGF CHIP 1/16W 47K	
R8501	ERJ3GEYJ331V	MGF CHIP 1/16W 330	
R8502	ERJ3GEYJ331V	MGF CHIP 1/16W 330	
R8503	ERJ3GEYJ331V	MGF CHIP 1/16W 330	
R8504	ERJ3GEYJ331V	MGF CHIP 1/16W 330	
R8505	ERJ3GEYJ151V	MGF CHIP 1/16W 150	
R8506	ERJ3GEYJ473V	MGF CHIP 1/16W 47K	
R8507	ERJ3GEYJ473V	MGF CHIP 1/16W 47K	
R8508	ERJ3GEYJ473V	MGF CHIP 1/16W 47K	

Ref. No.	Part No.	Part Name & Description	Remarks
R8509	ERJ3GEYJ473V	MGF CHIP 1/16W 47K	
R8510	ERJ3GEYJ103V	MGF CHIP 1/16W 10K	
R8511	ERJ3GEYJ103V	MGF CHIP 1/16W 10K	
R8512	ERJ3GEYJ103V	MGF CHIP 1/16W 10K	
R8513	ERJ3GEYJ103V	MGF CHIP 1/16W 10K	
R8514	ERJ3GEYJ103V	MGF CHIP 1/16W 10K	

CAPACITORS

Ref. No.	Part No.	Part Name & Description	Remarks
C8000	ECJ1VF1C104Z	C CHIP 16V 0.1UF	
C8001	ECJ1VF1C104Z	C CHIP 16V 0.1UF	
C8002	ECJ1VF1C104Z	C CHIP 16V 0.1UF	
C8003	ECJ1VF1C104Z	C CHIP 16V 0.1UF	
C8004	ECJ1VF1C104Z	C CHIP 16V 0.1UF	
C8005	ECJ1VF1C104Z	C CHIP 16V 0.1UF	
C8006	ECJ1VF1C104Z	C CHIP 16V 0.1UF	
C8007	ECJ1VF1C104Z	C CHIP 16V 0.1UF	
C8008	ECJ1VF1C104Z	C CHIP 16V 0.1UF	
C8009	ECJ1VF1C104Z	C CHIP 16V 0.1UF	
C8010	ECJ1VF1C104Z	C CHIP 16V 0.1UF	
C8011	ECJ1VF1C104Z	C CHIP 16V 0.1UF	
C8012	ECJ1VF1C104Z	C CHIP 16V 0.1UF	
C8013	ECJ1VF1C104Z	C CHIP 16V 0.1UF	
C8014	ECJ1VF1C104Z	C CHIP 16V 0.1UF	
C8015	ECJ1VF1C104Z	C CHIP 16V 0.1UF	
C8016	ECJ1VF1C104Z	C CHIP 16V 0.1UF	
C8017	ECJ1VF1C104Z	C CHIP 16V 0.1UF	
C8018	ECJ1VF1C104Z	C CHIP 16V 0.1UF	
C8019	ECJ1VF1C104Z	C CHIP 16V 0.1UF	
C8020	ECJ1VF1C104Z	C CHIP 16V 0.1UF	
C8021	ECJ1VF1C104Z	C CHIP 16V 0.1UF	
C8022	ECJ1VF1C104Z	C CHIP 16V 0.1UF	
C8023	ECJ1VF1C104Z	C CHIP 16V 0.1UF	
C8025	ECJ2VC1H151J	C CHIP 50V 150PF	
C8026	ECEV1CS100S	ELECTROLYTIC CHIP 16V 10UF	
C8027	ECEV0JA101S	ELECTROLYTIC CHIP 6.3V 100UF	
C8030	ECJ1VF1C104Z	C CHIP 16V 0.1UF	
C8031	ECJ1VF1C104Z	C CHIP 16V 0.1UF	
C8034	ECEV0JA331	ELECTROLYTIC CHIP 6.3V 330UF	
C8041	ECJ1VF1C104Z	C CHIP 16V 0.1UF	
C8042	ECEV1AA470WR	ELECTROLYTIC CHIP 10V 47UF	
C8043	ECEV1AA101SP	ELECTROLYTIC CHIP 10V 100UF	
C8044	ECEV1AA101SP	ELECTROLYTIC CHIP 10V 100UF	
C8045	ECJ1VF1C104Z	C CHIP 16V 0.1UF	
C8047	ECJ1VF1C104Z	C CHIP 16V 0.1UF	
C8048	ECEV1CS100S	ELECTROLYTIC CHIP 16V 10UF	
C8049	ECEV1AA470WR	ELECTROLYTIC CHIP 10V 47UF	
C8050	ECEV0JA101S	ELECTROLYTIC CHIP 6.3V 100UF	
C8054	ECEV1AA101SP	ELECTROLYTIC CHIP 10V 100UF	
C8056	ECEV0JA470S	ELECTROLYTIC CHIP 6.3V 47UF	
C8058	ECJ1VF1C104Z	C CHIP 16V 0.1UF	
C8102	ECUE1C104ZFV	C CHIP 16V 0.1UF	
C8106	ECJ1VF1C104Z	C CHIP 16V 0.1UF	

Ref. No.	Part No.	Part Name & Description	Remarks
C8107	ECJ1VF1C104Z	C CHIP 16V 0.1UF	
C8109	ECJ1VF1C104Z	C CHIP 16V 0.1UF	
C8110	ECJ1VF1C104Z	C CHIP 16V 0.1UF	
C8111	ECJ1VF1C104Z	C CHIP 16V 0.1UF	
C8112	ECJ1VF1C104Z	C CHIP 16V 0.1UF	
C8201	ECJ1VF1C104Z	C CHIP 16V 0.1UF	
C8202	ECJ1VF1C104Z	C CHIP 16V 0.1UF	
C8203	ECJ1VF1C104Z	C CHIP 16V 0.1UF	
C8206	ECJ1VF1C104Z	C CHIP 16V 0.1UF	
C8207	ECJ1VF1C104Z	C CHIP 16V 0.1UF	
C8208	ECJ1VF1C104Z	C CHIP 16V 0.1UF	
C8209	ECEV1CS100S	ELECTROLYTIC CHIP 16V 10UF	
C8210	ECJ1VF1C104Z	C CHIP 16V 0.1UF	
C8211	ECEV0JA101S	ELECTROLYTIC CHIP 6.3V 100UF	
C8215	ECEV0JA470S	ELECTROLYTIC CHIP 6.3V 47UF	
C8219	ECJ1VF1C104Z	C CHIP 16V 0.1UF	
C8220	ECJ1VF1C104Z	C CHIP 16V 0.1UF	
C8221	ECJ1VF1C104Z	C CHIP 16V 0.1UF	
C8222	ECJ1VF1C104Z	C CHIP 16V 0.1UF	
C8223	ECJ1VF1C104Z	C CHIP 16V 0.1UF	
C8224	ECJ1VF1C104Z	C CHIP 16V 0.1UF	
C8225	ECEV1CS100S	ELECTROLYTIC CHIP 16V 10UF	
C8226	ECJ1VF1C104Z	C CHIP 16V 0.1UF	
C8227	ECEV1AA470WR	ELECTROLYTIC CHIP 10V 47UF	
C8228	ECJ1VC1H390J	C CHIP 50V 39PF	
C8229	ECJ1VC1H390J	C CHIP 50V 39PF	
C8230	ECJ1VC1H220J	C CHIP 50V 22PF	
C8231	ECJ1VC1H390J	C CHIP 50V 39PF	
C8232	ECJ1VC1H390J	C CHIP 50V 39PF	
C8233	ECJ1VC1H220J	C CHIP 50V 22PF	
C8234	ECJ1VC1H390J	C CHIP 50V 39PF	
C8235	ECJ1VC1H390J	C CHIP 50V 39PF	
C8236	ECJ1VC1H220J	C CHIP 50V 22PF	
C8238	ECJ1VC1H220J	C CHIP 50V 22PF	
C8239	ECJ1VC1H220J	C CHIP 50V 22PF	
C8240	ECJ1VC1H220J	C CHIP 50V 22PF	
C8241	ECEV0JA470S	ELECTROLYTIC CHIP 6.3V 47UF	
C8243	ECUE1H103ZFV	C CHIP 50V 0.01UF	
C8244	ECUE1H103ZFV	C CHIP 50V 0.01UF	
C8245	ECUE1H103ZFV	C CHIP 50V 0.01UF	
C8246	ECUE1H103ZFV	C CHIP 50V 0.01UF	
C8247	ECUE1H103ZFV	C CHIP 50V 0.01UF	
C8248	ECUE1H103ZFV	C CHIP 50V 0.01UF	
C8249	ECUE1H103ZFV	C CHIP 50V 0.01UF	
C8250	ECUE1H103ZFV	C CHIP 50V 0.01UF	
C8251	ECUE1H103ZFV	C CHIP 50V 0.01UF	
C8252	ECUE1H103ZFV	C CHIP 50V 0.01UF	
C8253	ECUE1H103ZFV	C CHIP 50V 0.01UF	
C8301	ECJ1VF1C104Z	C CHIP 16V 0.1UF	
C8302	ECJ1VF1A105Z	C CHIP 10V 1UF	
C8303	ECJ1VF1C104Z	C CHIP 16V 0.1UF	
C8403	ECEV1CS100S	ELECTROLYTIC CHIP 16V 10UF	
C8404	ECEV1CA101	ELECTROLYTIC CHIP 16V 100UF	
C8405	ECEV1CS100S	ELECTROLYTIC CHIP 16V 10UF	

Ref. No.	Part No.	Part Name & Description	Remarks
C8406	ECJ1VF1C104Z	C CHIP 16V 0.1UF	
C8407	ECEV1EA330SP	ELECTROLYTIC CHIP 25V 33UF	
C8408	ECEV1EA330SP	ELECTROLYTIC CHIP 25V 33UF	
C8409	ECJ1VC1H101J	C CHIP 50V 100PF	
C8410	ECJ1VC1H101J	C CHIP 50V 100PF	
C8411	ECJ1VB1H102K	C CHIP 50V 1000PF	
C8412	ECJ1VB1H102K	C CHIP 50V 1000PF	
C8414	ECJ1VB1H472K	C CHIP 50V 4700PF	
C8416	ECJ1VB1H472K	C CHIP 50V 4700PF	
C8421	ECJ1VC1H330J	C CHIP 50V 33PF	
C8425	ECEV1CA100S	ELECTROLYTIC CHIP 16V 10UF	
C8426	ECEV1CA100S	ELECTROLYTIC CHIP 16V 10UF	
C8429	ECEV1CS100S	ELECTROLYTIC CHIP 16V 10UF	
C8430	ECEV1CS100S	ELECTROLYTIC CHIP 16V 10UF	
C8431	ECEV1CS100S	ELECTROLYTIC CHIP 16V 10UF	
C8432	ECEV1CS100S	ELECTROLYTIC CHIP 16V 10UF	
C8438	ECJ1VF1C104Z	C CHIP 16V 0.1UF	
C8439	ECJ1VF1C104Z	C CHIP 16V 0.1UF	
C8440	ECJ1VF1C104Z	C CHIP 16V 0.1UF	
C8442	ECEV1AA470WR	ELECTROLYTIC CHIP 10V 47UF	
C8443	ECJ1VF1C104Z	C CHIP 16V 0.1UF	
C8507	ECJ1VC1H330J	C CHIP 50V 33PF	
C8508	ECJ1VC1H330J	C CHIP 50V 33PF	
C8509	ECJ1VC1H330J	C CHIP 50V 33PF	
C8510	ECJ1VC1H330J	C CHIP 50V 33PF	
C8511	ECJ1VC1H330J	C CHIP 50V 33PF	
C8513	ECJ1VF1C104Z	C CHIP 16V 0.1UF	
C8514	ECJ1VF1C104Z	C CHIP 16V 0.1UF	

FILTERS

Ref. No.	Part No.	Part Name & Description	Remarks
FL8000	LSLF0014	EMI FILTER CHIP	
FL8001	LSLF0014	EMI FILTER CHIP	
FL8002	LSLF0014	EMI FILTER CHIP	
FL8003	LSLF0014	EMI FILTER CHIP	
FL8200	LSLF0014	EMI FILTER CHIP	

COILS

Ref. No.	Part No.	Part Name & Description	Remarks
L8000	J0JHC0000027	EMI FILTER CHIP	
L8002	J0JBC0000010	EMI FILTER CHIP	
L8003	J0JBC0000010	EMI FILTER CHIP	
L8004	J0JBC0000010	EMI FILTER CHIP	
L8005	J0JBC0000010	EMI FILTER CHIP	
L8006	J0JBC0000010	EMI FILTER CHIP	
L8007	J0JBC0000010	EMI FILTER CHIP	
L8009	LSLF0008	LOW PASS FILTER	
L8010	LSLF0008	LOW PASS FILTER	
L8011	J0JGC0000017	EMI FILTER CHIP	
L8012	J0JGC0000017	EMI FILTER CHIP	
L8013	J0JGC0000017	EMI FILTER CHIP	
L8017	LSLF0006	LOW PASS FILTER	
L8018	J0JBC0000010	EMI FILTER CHIP	
L8020	J0JBC0000010	EMI FILTER CHIP	
L8021	J0JCC0000117	EMI FILTER CHIP	
L8022	J0JHC0000027	EMI FILTER CHIP	
L8023	LSLF0015	EMI FILTER CHIP	
L8102	LSLF0015	EMI FILTER CHIP	
L8200	LSLF0015	EMI FILTER CHIP	
L8204	J0JBC0000010	EMI FILTER CHIP	
L8205	J0JBC0000010	EMI FILTER CHIP	
L8206	J0JBC0000010	EMI FILTER CHIP	
L8207	J0JHC0000027	EMI FILTER CHIP	
L8210	LSLF0006	LOW PASS FILTER	
L8212	G1C270MA0021	INDUCTOR CHIP	
L8213	G1C330MA0021	INDUCTOR CHIP	
L8214	G1C270MA0021	INDUCTOR CHIP	
L8215	G1C270MA0021	INDUCTOR CHIP	
L8216	G1C330MA0021	INDUCTOR CHIP	
L8217	G1C270MA0021	INDUCTOR CHIP	
L8218	G1C270MA0021	INDUCTOR CHIP	
L8219	G1C330MA0021	INDUCTOR CHIP	
L8220	G1C270MA0021	INDUCTOR CHIP	
L8222	LSLF0015	EMI FILTER CHIP	
L8223	LSLF0015	EMI FILTER CHIP	
L8301	LSLF0006	LOW PASS FILTER	
L8400	J0JBC0000010	EMI FILTER CHIP	
L8401	J0JBC0000010	EMI FILTER CHIP	
L8402	LSLF0032	EMI FILTER CHIP	
L8410	J0JBC0000010	EMI FILTER CHIP	
L8411	J0JBC0000010	EMI FILTER CHIP	
L8416	LSLF0006	LOW PASS FILTER	
L8501	LSLF0006	LOW PASS FILTER	
L8506	G1C1R0K00005	INDUCTOR CHIP	
L8507	G1C1R0K00005	INDUCTOR CHIP	
L8508	G1C1R0K00005	INDUCTOR CHIP	
L8511	LSLF0015	EMI FILTER CHIP	
L8512	G1C1R0K00005	INDUCTOR CHIP	
L8513	G1C1R0K00005	INDUCTOR CHIP	

CRYSTAL OSCILLATOR

Ref. No.	Part No.	Part Name & Description	Remarks
X8501	VSXS0240	CRYSTAL OSCILLATOR	

PIN HEADERS

Ref. No.	Part No.	Part Name & Description	Remarks
P8001	VJPS0770	CONNECTOR 11P	
P8002	VJPS0771	CONNECTOR PLUG 13P	
P8003	VJPS0771	CONNECTOR PLUG 13P	
P8004	LSJS0040	CONNECTOR 40P	

MISCELLANEOUS

Ref. No.	Part No.	Part Name & Description	Remarks
737	VEKS5836	CONNECTOR CABLE W/PLUG,0V	
791	VEKS5773	CONNECTOR CABLE W/PLUG,DC 5V	

13. SCHEMATIC DIAGRAMS FOR PRINTING WITH LETTER SIZE

POWER SUPPLY C.B.A.
VEPS1029B

CAUTION: FOR CONTINUED PROTECTION AGAINST FIRE HAZARD,
REPLACE ONLY WITH THE SAME TYPE 3A 125V/250V FUSE.
ATTENTION: POUR UNE PROTECTION CONTINUE LES RISQUES
D' INCENDIE N' UTILISERQUE DES FUSIBLE DE MÉME
TYPE 3A 125V/250V

IMPORTANT SAFETY NOTICE:
COMPONENTS IDENTIFIED BY THE SIGN ⚠ HAVE
SPECIAL CHARACTERISTICS IMPORTANT FOR SAFETY.
WHEN REPLACING ANY OF THESE COMPONENTS,
USE ONLY THE SPECIFIED PARTS.

NOTE:
CIRCUIT BOARD LAYOUT INCLUDES COMPONENTS WHICH ARE NOT USED.
PLEASE REFER TO THE SCHEMATIC DIAGRAM AND PARTS LIST FOR PROPER PARTS CONTENT.

NOTE:
FOR SCHEMATIC DIAGRAM AND CIRCUIT BOARD LAYOUT NOTES,
REFER TO BEGINNING OF SCHEMATIC SECTION.

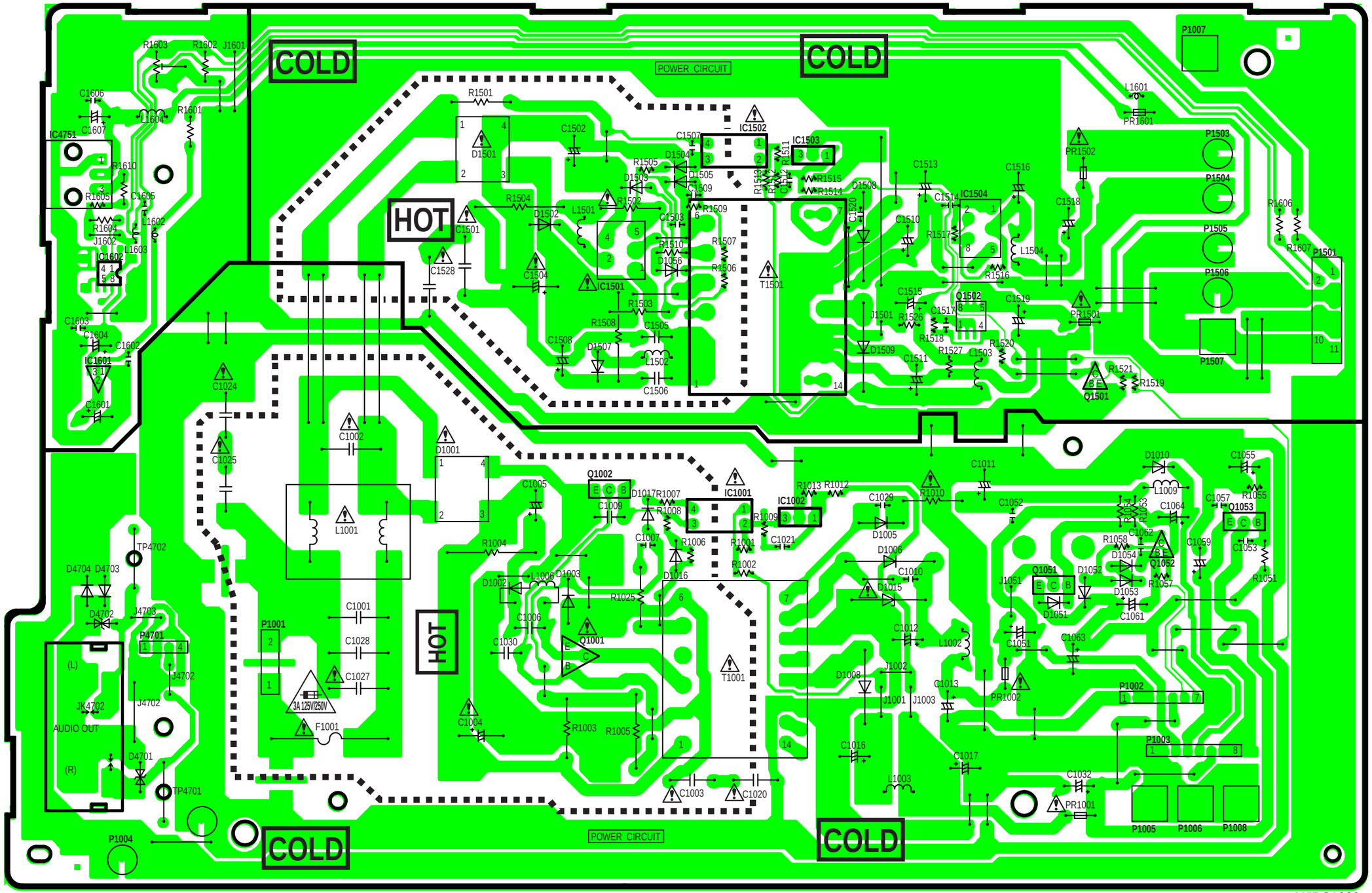

VJBS1029

HOT CIRCUIT.BE CAREFUL AND USE AN ISOLATION TRANSFORMER WHEN SERVICING.

DVD DECODER C.B.A.
LSEP2007B

NOTE: MULTILAYER C.B.A.
THIS C.B.A. IS Multi-Layer C.B.A. THIS CIRCUIT BOARD SHOWS COMPONENT LAYOUT-PATTERN FOR COMPONENT SIDE AND FOIL SIDE. LAYOUT PATETRNS ARE SINGLE PATTERN FOR EACH SIDE THAT MAKE EASY TO SIGHT THE COMPONENT LAYOUT.

NOTE:
CIRCUIT BOARD LAYOUT INCLUDES COMPONENTS WHICH ARE NOT USED.
PLEASE REFER TO THE SCHEMATIC DIAGRAM AND PARTS LIST FOR PROPER PARTS CONTENT.

NOTE:
FOR SCHEMATIC DIAGRAM AND CIRCUIT BOARD LAYOUT NOTES, REFER TO BEGINNING OF SCHEMATIC SECTION.

(COMPONENT SIDE)

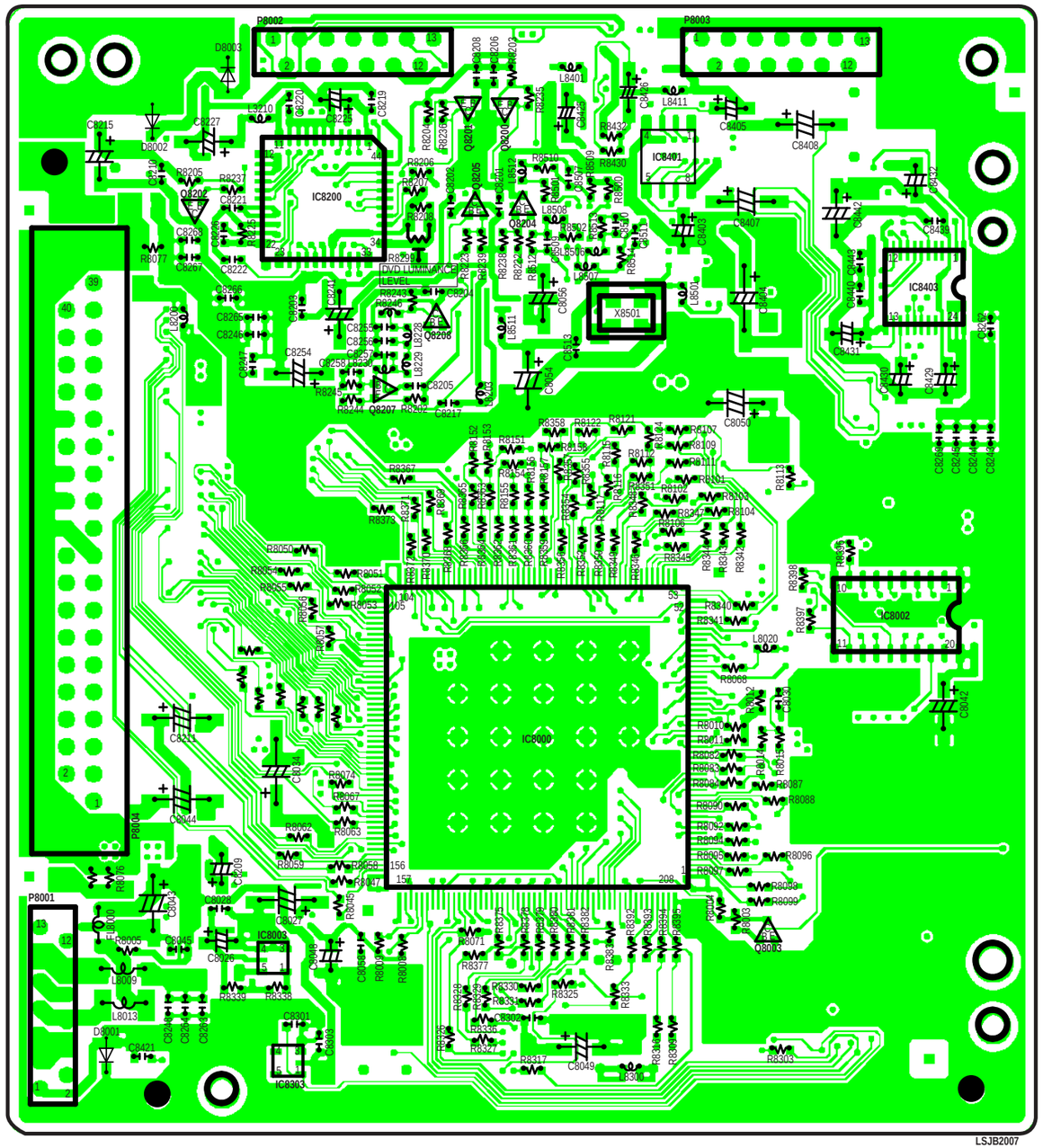

(FOIL SIDE)

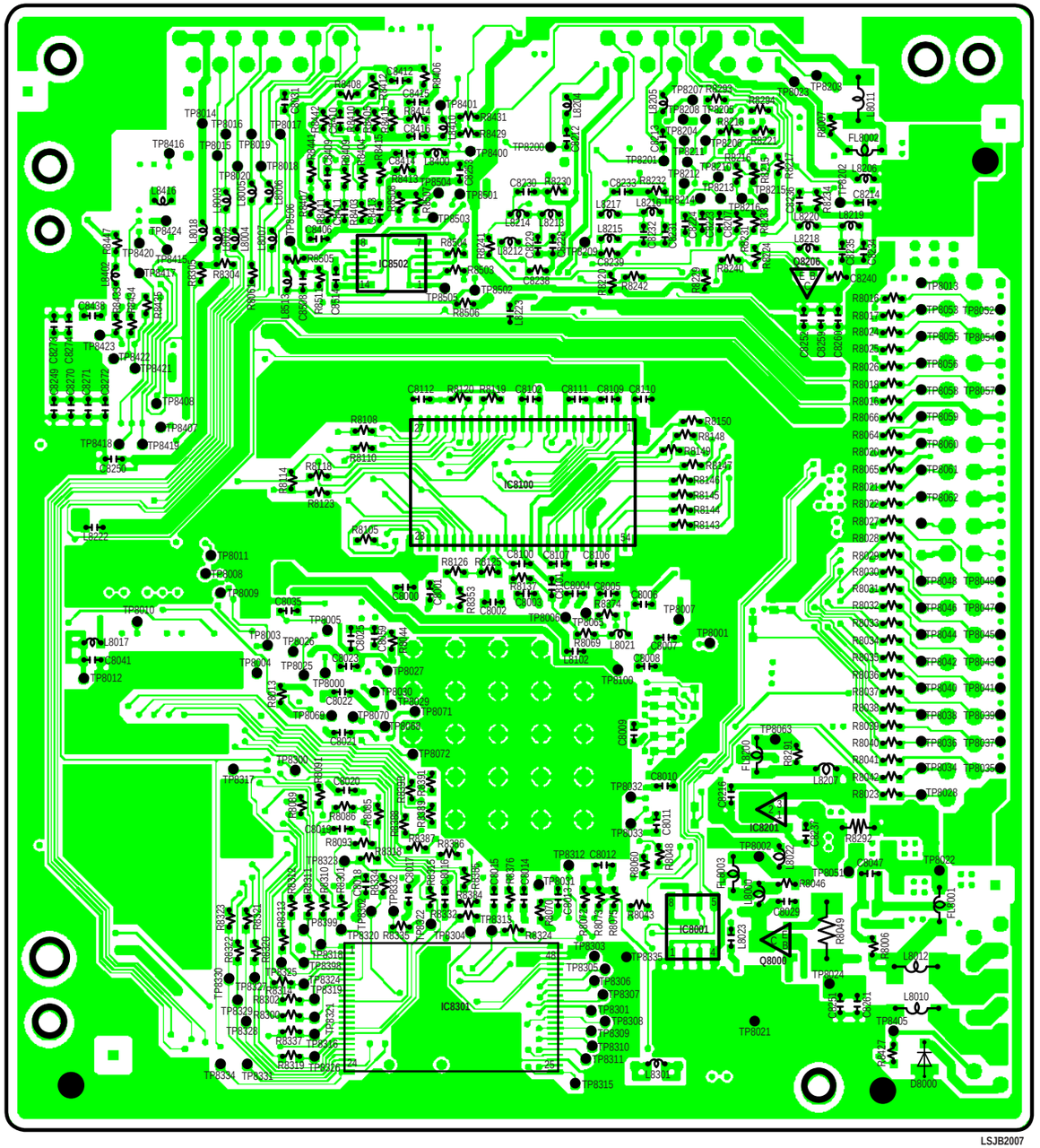

Hi-Fi AUDIO/VIDEO HEAD AMP C.B.A. LSEP2010A

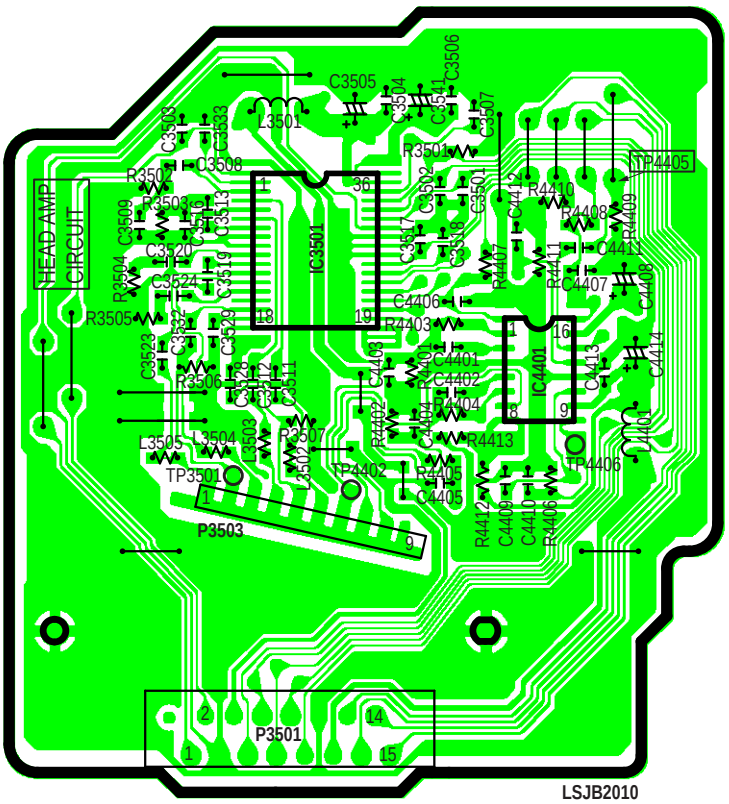

NOTE:
FOR SCHEMATIC DIAGRAM AND CIRCUIT BOARD LAYOUT NOTES,
REFER TO BEGINNING OF SCHEMATIC SECTION.

NOTE:
CIRCUIT BOARD LAYOUT INCLUDES COMPONENTS WHICH ARE NOT USED.
PLEASE REFER TO THE SCHEMATIC DIAGRAM AND PARTS LIST FOR PROPER PARTS CONTENT.

VERTICAL C.B.A. LRP63019D

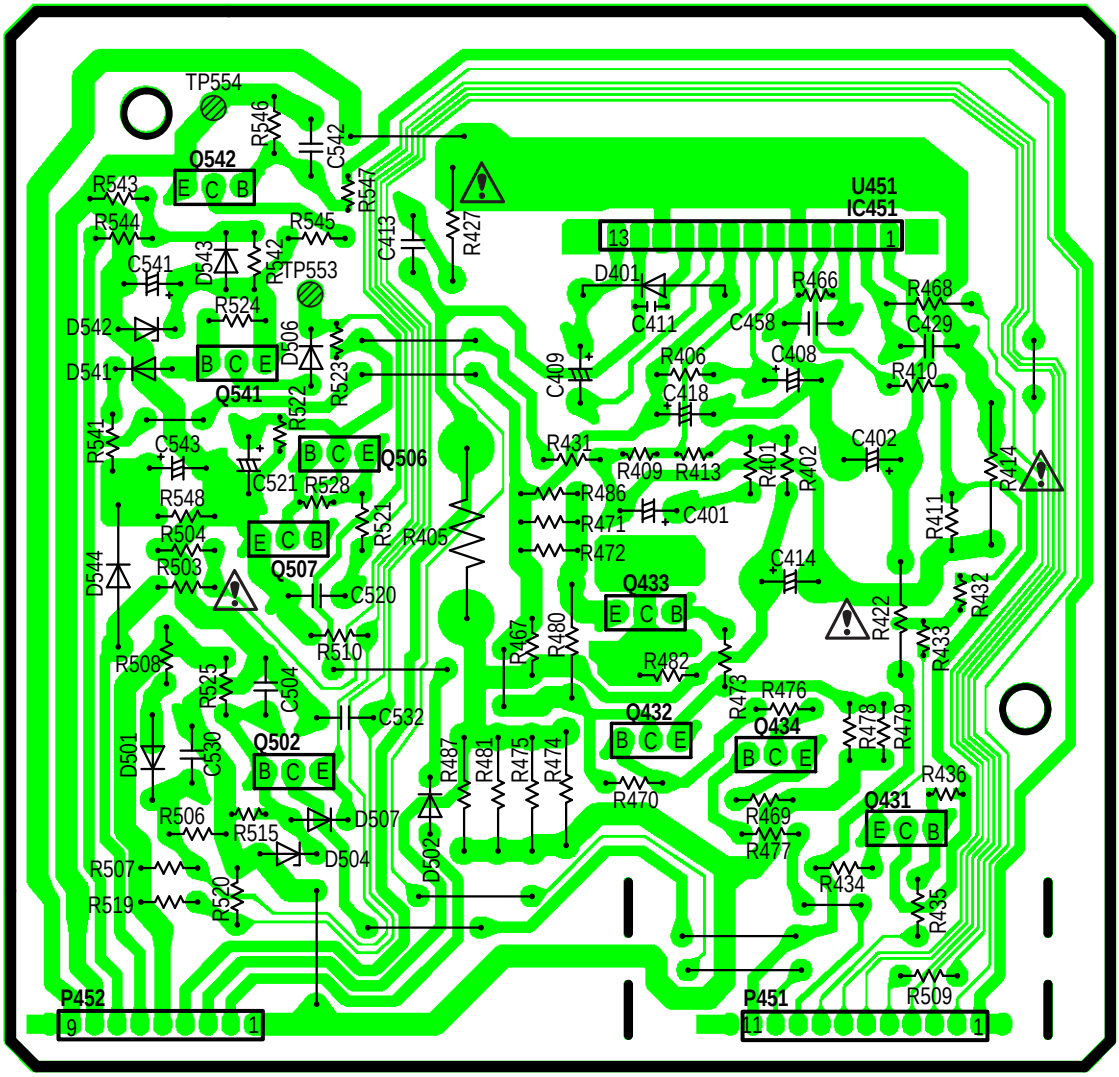

LRP63019

NOTE:
FOR SCHEMATIC DIAGRAM AND CIRCUIT BOARD LAYOUT NOTES,
REFER TO BEGINNING OF SCHEMATIC SECTION.

NOTE:
CIRCUIT BOARD LAYOUT INCLUDES COMPONENTS WHICH ARE NOT USED.
PLEASE REFER TO THE SCHEMATIC DIAGRAM AND PARTS LIST FOR PROPER PARTS CONTENT.

IMPORTANT SAFETY NOTICE:
COMPONENTS IDENTIFIED BY THE SIGN ⚠ HAVE
SPECIAL CHARACTERISTICS IMPORTANT FOR SAFETY.
WHEN REPLACING ANY OF THESE COMPONENTS,
USE ONLY THE SPECIFIED PARTS.

CAUTION: WHEN SERVICING THIS C.B.A., AVOID TOUCHING HIGH VOLTAGE COMPONENTS.

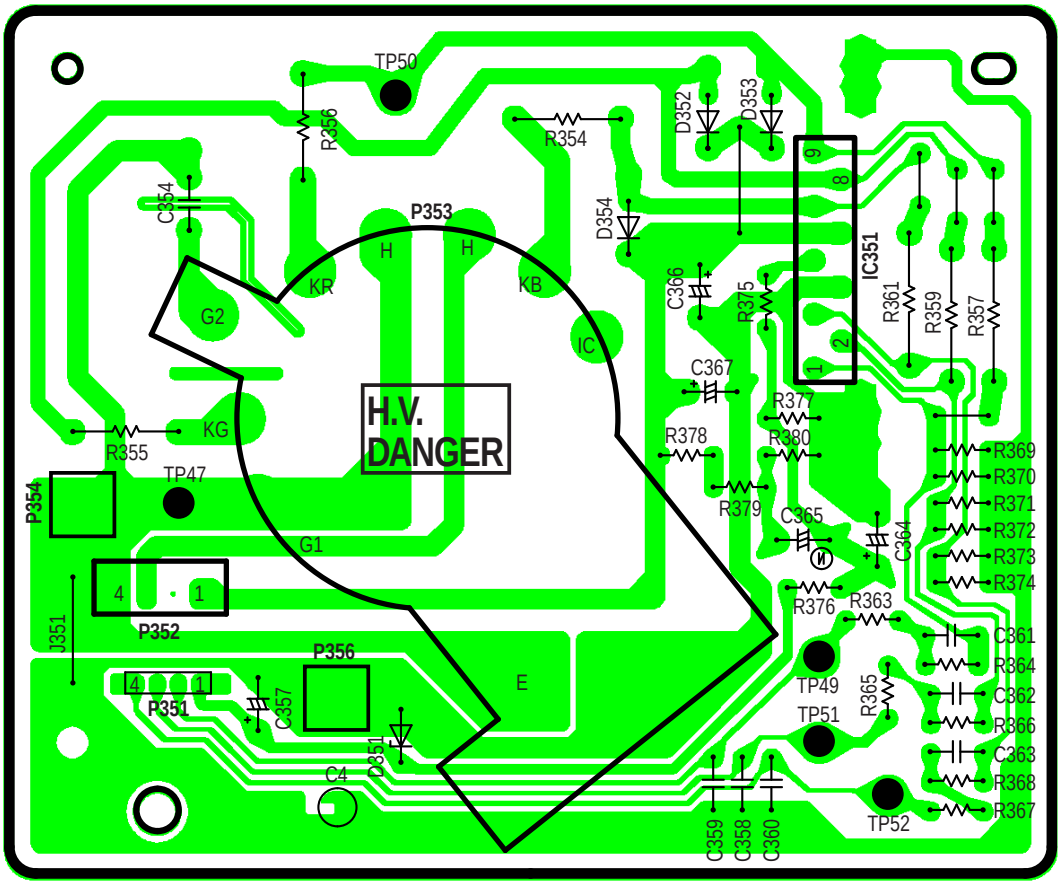

LRP63013

NOTE:
FOR SCHEMATIC DIAGRAM AND CIRCUIT BOARD LAYOUT NOTES,
REFER TO BEGINNING OF SCHEMATIC SECTION.

NOTE:
CIRCUIT BOARD LAYOUT INCLUDES COMPONENTS WHICH ARE NOT USED.
PLEASE REFER TO THE SCHEMATIC DIAGRAM AND PARTS LIST FOR PROPER PARTS CONTENT.

AUDIO AMP C.B.A. VEPS4039A

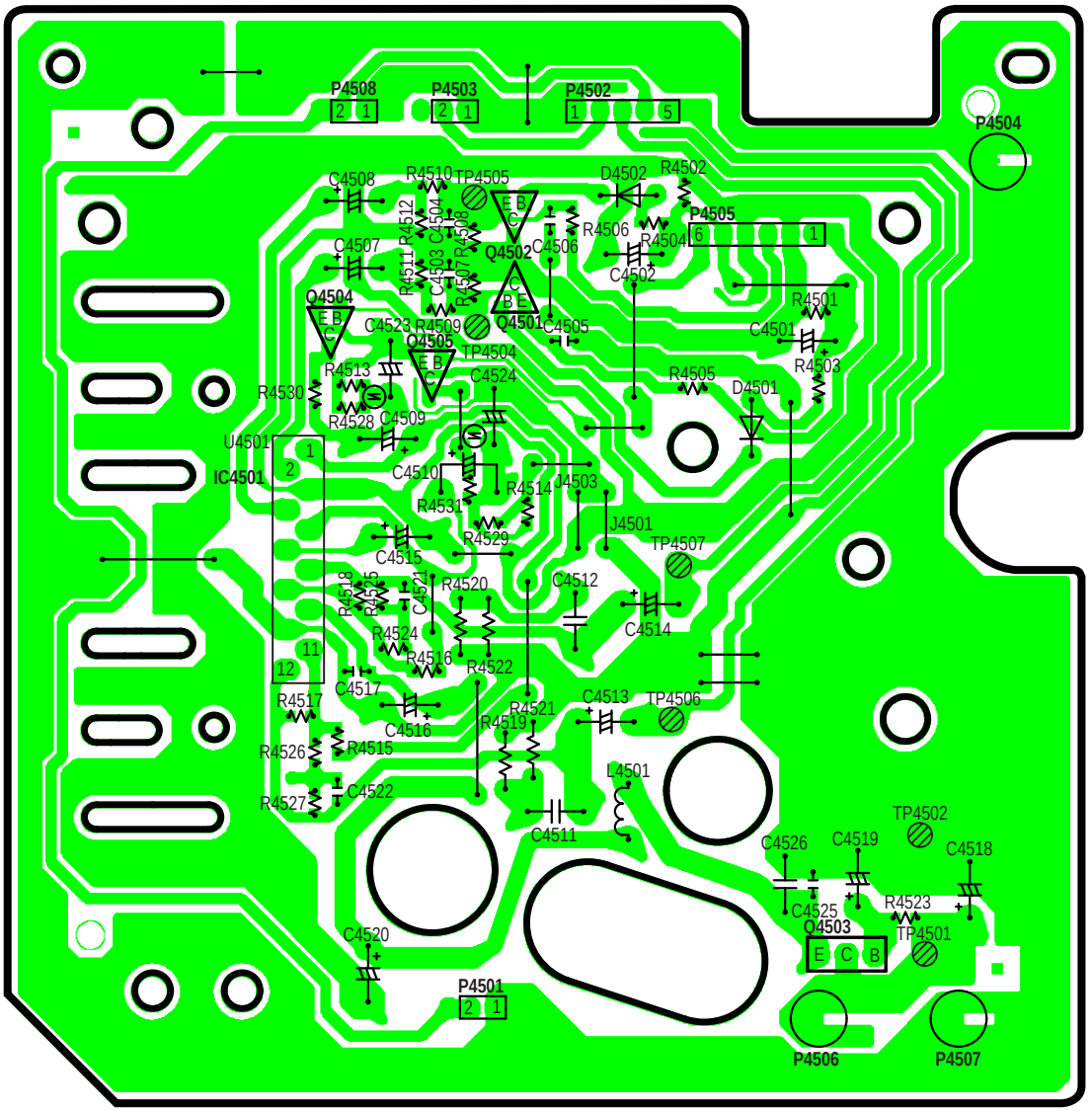

NOTE:
FOR SCHEMATIC DIAGRAM AND CIRCUIT BOARD LAYOUT NOTES,
REFER TO BEGINNING OF SCHEMATIC SECTION.

NOTE:
CIRCUIT BOARD LAYOUT INCLUDES COMPONENTS WHICH ARE NOT USED.
PLEASE REFER TO THE SCHEMATIC DIAGRAM AND PARTS LIST FOR PROPER PARTS CONTENT.

OPERATION C.B.A. LSEP2022A

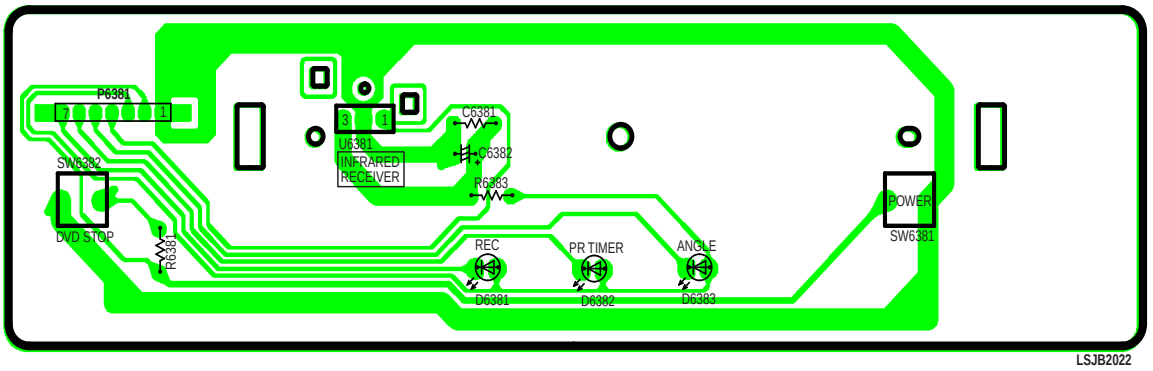

NOTE:

FOR SCHEMATIC DIAGRAM AND CIRCUIT BOARD LAYOUT NOTES,
REFER TO BEGINNING OF SCHEMATIC SECTION.

NOTE:

CIRCUIT BOARD LAYOUT INCLUDES COMPONENTS WHICH ARE NOT USED.
PLEASE REFER TO THE SCHEMATIC DIAGRAM AND PARTS LIST FOR PROPER PARTS CONTENT.

AUDIO/VIDEO JACK C.B.A.
LSEP2023A

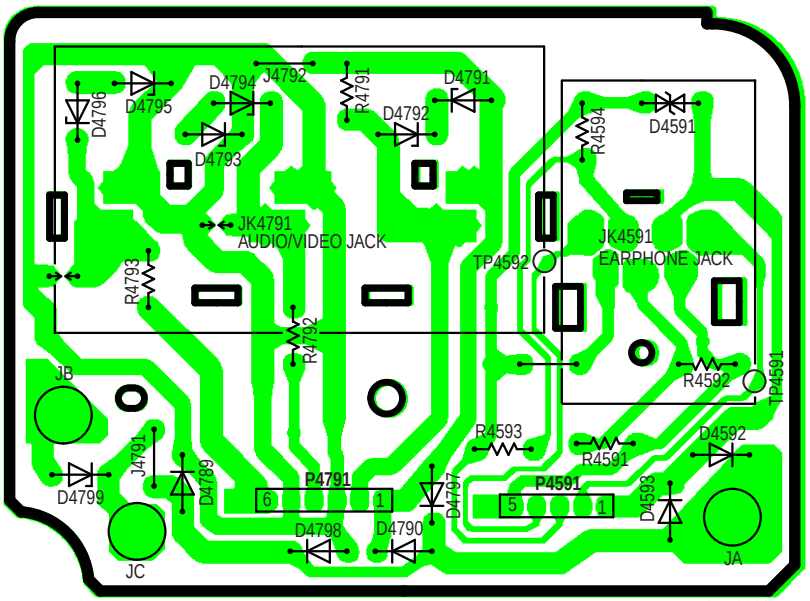

NOTE:
FOR SCHEMATIC DIAGRAM AND CIRCUIT BOARD LAYOUT NOTES,
REFER TO BEGINNING OF SCHEMATIC SECTION.

NOTE:
CIRCUIT BOARD LAYOUT INCLUDES COMPONENTS WHICH ARE NOT USED.
PLEASE REFER TO THE SCHEMATIC DIAGRAM AND PARTS LIST FOR PROPER PARTS CONTENT.

1. **Important safety notice**
   Components identified by the sign ⚠ have special characteristics important for safety. When replacing any of these components. Use only the specified parts.

2. Do not use the part number shown on this drawing for ordering.
   The correct part number and part value is shown in the parts list, and may be slightly different or amended since this drawing was prepared.

3. Use only original replacement parts:
   To maintain original function and reliability of repaired units, use only original replacement parts which are listed with their part numbers in the parts list section of the service manual.

4. Parts different in shape or size may be used.
   However, only interchangeable parts will be supplied as service replacement parts.

5. Test point information
   ⓘ :Test point with a jumper wire across a hole in P.C.B.
   ▭→ :Test point with a component lead on the foil side.
   ⊘ :Test point with no test pin.
   ● :Test point with a test pin.

Schematic Diagram Notes

1. Indication for Zener Voltage of Zener Diodes
   The Zener Voltage of Zener Diodes are indicated as such on Schematic Diagrams.

   Example:
   (6.2V).....Zener Voltage

2. How to identify Connectors
   Each connector is labeled with a Connector No. and Pin No. Indicating what it is connected to,
   in other words, its counter part.
   Use the interconnection schematic diagram to find the connection between associated connectors.

   Example:
   The connections between C.B.A.s are shown below.

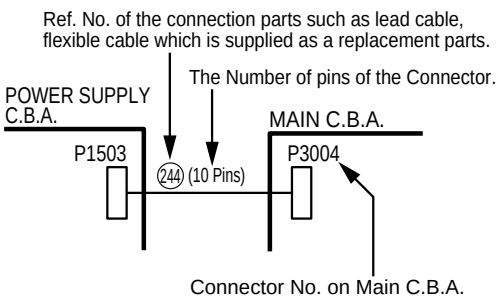

3. Parts marked "PT" are not used in any models included in this service model.

   Example:

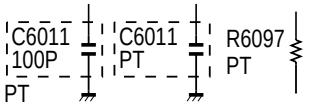

4. Jumper wires are used for WA10, WA5 etc and these are not supplied as replacement parts.

Signal Waveform Note

How to read Signal Waveform

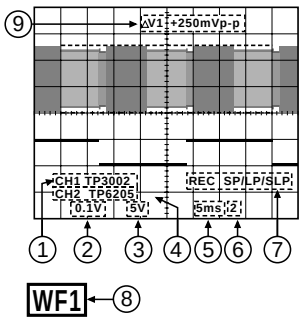

① Connecting Point
② Volts/Div
③ Volts/Div
④ Connecting Point
⑤ Time/Div
⑥ Trigger Channel of the scope (1:CH1,2:CH2)
⑦ Operation Mode of VCR
⑧ Waveform Point on Schematic
⑨ ΔV1:Peak to Peak

Voltage Chart Note

Voltage Measurement
a. Color bar signal in SP mode.
b. ---:Unmeasurable or not necessary to measure.

Circuit Board Layout Note

Circuit Board Layout shows components installed for various models.
For proper parts content for the model you are servicing, please refer to the schematic diagram and parts list.

NOTE:
Circuit Board Layout includes components which are not used.

MAIN I (SYSTEM CONTROL/ SERVO) SCHEMATIC DIAGRAM

NOTE:
PARTS ENCLOSED IN DASHED LINES MARKED "PT" ARE NOT USED.

NOTE:
FOR SCHEMATIC DIAGRAM AND CIRCUIT BOARD LAYOUT NOTES, REFER TO BEGINNING OF SCHEMATIC SECTION.

NOTE: For placing a purchase order of the parts, be sure to use the part number listed in the parts list. Do not use the part number on this diagram.

KEY VOLTAGE CHART (SW6301～6305,6307 ～ 6310, 9312,9313,6381,6382)

TERMINAL VOLTAGE	0V～0.6V	0.7V～1.9V	2.0V～3.1V	3.2V～4.4V
KEY DATA1 (PIN 89)	CH DOWN	VOLUME DOWN	FF/CUE	-----
KEY DATA2 (PIN 88)	CH UP	VOLUME UP	-----	-----
KEY DATA3 (PIN 87)	PLAY	REW /REVIEW	REC	DVD PLAY
KEY DATA4 (PIN 86)	STOP/EJECT	OPEN /CLOSE	POWER	DVD STOP

REC VIDEO SIGNAL
CAPSTAN SERVO
REC AUDIO SIGNAL
CYLINDER SERVO

IC6001
MN101D06GCG
SYSTEM CONTROL/SERVO/TIMER MICROCONTROLLER

LINK TO I/O CHART

LINK TO VOLTAGE CHART

LSJB2021
AG-527DVDE
MAIN I SCHEMATIC DIAGRAM

I/O CHART OF IC6001

Pin No.	I/O	Signal Name	Description
1	I	P_DOWN_L	POWER DOWN(L)
2	O	CRSS_L	CUE/REV/SS(L)
3	I	T-REEL	TAKEUP REEL PULSE
4	I	S-REEL	SUPPLY REEL PULSE
5	I	IR-DATA	IR-DATA
6	O	DEFEAT_H	AUDIO DEFEAT(H)
7	O	A_MUTE_H	AUDIO MUTE(H)
8	I	IIC_SVC_L	I2C SERVICE MODE(L)
9	I	HF_PLAY_H	Hi-Fi AUDIO PB(H)
10	-	TUNER_L	(Not used)
11	I	D_SCK	DVD SERIAL CLOCK
12	I	D_DATA_IN	DVD SERIAL DATA 0
13	O	H_DATA_OUT	DVD SERIAL DATA 1
14	O	SCK	SERIAL CLOCK
15	I	DATA_IN	SERIAL DATA 0
16	O	DATA_OUT	SERIAL DATA 1
17	I/O	IIC_DATA	I2C SERIAL DATA
18	O	IIC_CLK	I2C SERIAL CLOCK
19	I/O	BEEPER	BEEPER
20	-	NC	(Not used)
21	O	CAP_F/R	CAPSTAN MOTOR REVERSE(H)/FORWARD(L)
22	O	BEEPER_ON_H	BEEPER ON(H)
23	O	HSW	HEAD SW
24	O	VLP	V-LOCK PULSE
25	I	RST	RESET(L)
26	O	3.58MHz/L	3.58MHz
27	O	HIFI_H_SW	Hi-Fi HEAD SW
28	O	POWER_ON_L	POWER ON(L)
29	O	V_D_REC_H	VIDEO DELAY REC(H)
30	I	LINE_SD_L	TV SIGNAL(L)
31	-	NC	(Not used)
32	O	A_VOLUME	AUDIO VOLUME
33	O	CAP	CAP ERROR
34	O	CYL	CYL ERROR
35	O	SP_MUTE_H	AUDIO AMP MUTE(H)
36	I	DVDD	VDD (+5V)
37	O	OSC_OUT	OSC 2
38	I	OSC_IN	OSC 1
39	-	DVSS	Ground
40	O	TNR_CE_H	TUNER CHIP ENABLE(H)
41	I	TNR_LOCK_L	TUNER LOCK SIGNAL(L)
42	-	SXI	SXI
43	I/O	FM_RAD_F_MONO_H/NOR_I	FM MONO(H)
44	O	TV_P_ON_H	TV POWER ON(H)
45	I	D_READY_L	DVD READY(L)
46	I	H_READY_L	HOST READY(L)
47	O	DEGAVSS_H/CV_OUT	(Not used)
48	-	VSS2_OSD	Ground
49	O	DVD_P_ON_H	DVD POWER ON(H)
50	I	CV_IN2	VIDEO

Pin No.	I/O	Signal Name	Description
51	I	VDD2_OSD	VDD (+5V)
52	O	OSD_CS_L	OSD CS(L)
53	O	LINE_H	LINE SIGNAL(H)
54	O	FM_RAD_H	FM RADIO(H)/TV(L)
55	O	VV_H	VV(H)/EE(L)
56	I	FM_RAD_STE_L	FM RADIO STEREO(L)/MONO(H)
57	I	FM_RAD_SD_L	FM RADIO SIGNAL(L)
58	O	PLAY_L	PB(L)
59	O	DVD_H	DVD(H)
60	I/O	LOAD-F/S/R	LOADING MOTOR CONTROL REVERSE(L)/STOP(M)/FORWARD(H)
61	O	A_DVD_H	AUDIO DVD(H)
62	O	HF_MUTE_H	Hi-Fi AUDIO MUTE(H)
63	O	V_MUTE_H	VIDEO MUTE(H)
64	I	S_TAB_ON_L	SAFETY TAB ON(L)
65	I	Y_PFG	CYL PG/FG
66	I	TNR_SD_L	TUNER SIGNAL(L))
67	O	FGF	CAP FG
68	I	AFG	CAP FG
69	O	VRO	V-REF 1
70	I	VRI	V-REF 2
71	-	AVSS	Ground
72	I	CTLA	CTL AMP
73	-	AVDD	VDD (+5V)
74	I/O	RCTLP	CTL PULSE(+)
75	-	RCTLN	CTL PULSE(-)
76	O	CTL_OUT	PB CONTROL PULSE
77	-	COS/PANA	(Not used)
78	I	DTS_AFC	AFC
79	I	OVER_CUR_H	OVER CURRENT(H)
80	I	T-PHOTO/M_SVC_L	TAKEUP PHOTO TR(L)/SERVICE(L)
81	I	S-PHOTO_L	SUPPLY PHOTO TR(L)
82	I	AT_ENV	ENV-VOLTAGE
83	-	L	SWITCHING TERMINAL OPTION (2HEAD/4HEAD/TV STEREO/Hi-Fi/2LC)
84	-	L	SWITCHING TERMINAL OPTION (FM RADIO/UNIV/DEMO)
85	-	KEY_IN_4	(Not used)
86	I	KEY_IN_3	KEY DATA 3
87	I	KEY_IN_2	KEY DATA 2
88	I	KEY_IN_1	KEY DATA 1
89	I	KEY_IN_0	KEY DATA0
90	O	D_RST_L	DVD RESET(L)
91	-	NC	(Not used)
92	-	NC	(Not used)
93	I	SAP_IN_L	SAP SIGNAL(L)
94	I	MTS_IN_L	MTS SIGNAL(L)
95	I	POS.3	MODE SW POSITION C
96	I	POS.2	MODE SW POSITION B
97	I	POS.1	MODE SW POSITION A
98	O	ROT_SW	ROTARY SW
99	O	HA_SW	HEAD AMP SW
100	I	D-ENV	ENVELOPE DET

CAPSTAN MOTOR ASS'Y

NOTE:
CAPSTAN MOTOR ASS'Y (REF. NO. 46) IS SUPPLIED AS A UNIT ONLY.
HOWEVER, THE FLAT FLEXIBLE CABLE (REF. NO. 48) IS AVAILABLE SEPARATELY AS A REPLACEMENT PART.

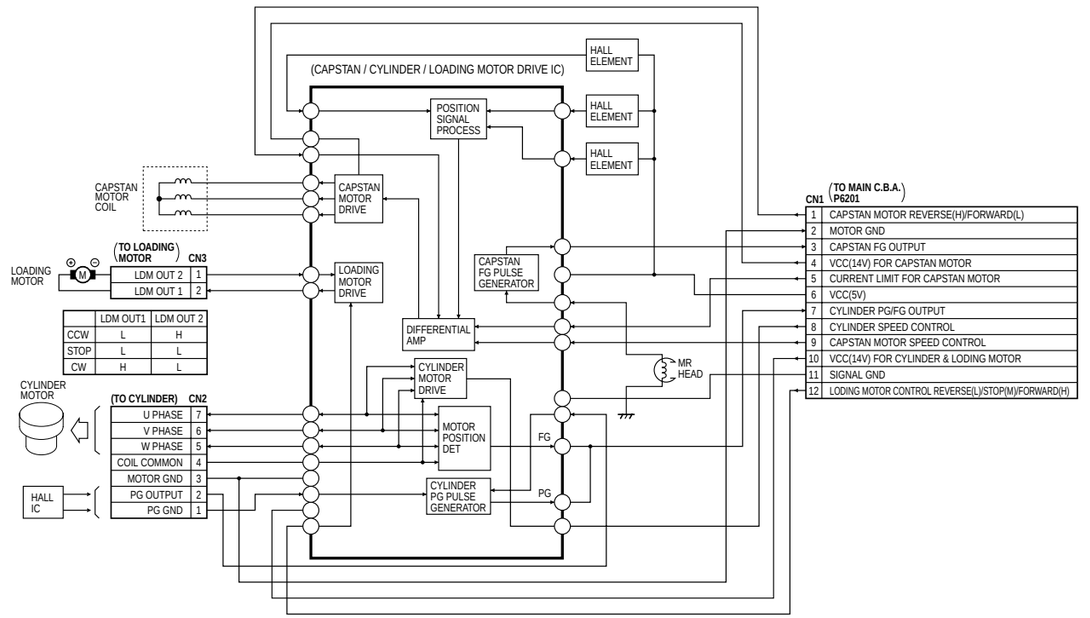

MAIN II (SIGNAL PROCESS/AUDIO) SCHEMATIC DIAGRAM

NOTE:
PARTS ENCLOSED IN DASHED LINES MARKED "PT" ARE NOT USED.

NOTE:
FOR SCHEMATIC DIAGRAM AND CIRCUIT BOARD LAYOUT NOTES, REFER TO BEGINNING OF SCHEMATIC SECTION.

NOTE: For placing a purchase order of the parts, be sure to use the part number listed in the parts list. Do not use the part number on this diagram.

REC VIDEO SIGNAL
REC AUDIO SIGNAL
PB VIDEO SIGNAL
PB AUDIO SIGNAL
CAPSTAN SERVO

LINK TO VOLTAGE CHART

LSJB2021
AG-527DVDE
MAIN II SCHEMATIC DIAGRAM

IC3001 VIDEO/AUDIO SIGNAL PROCESS / HEAD AMP IC- DETAIL BLOCK DIAGRAM

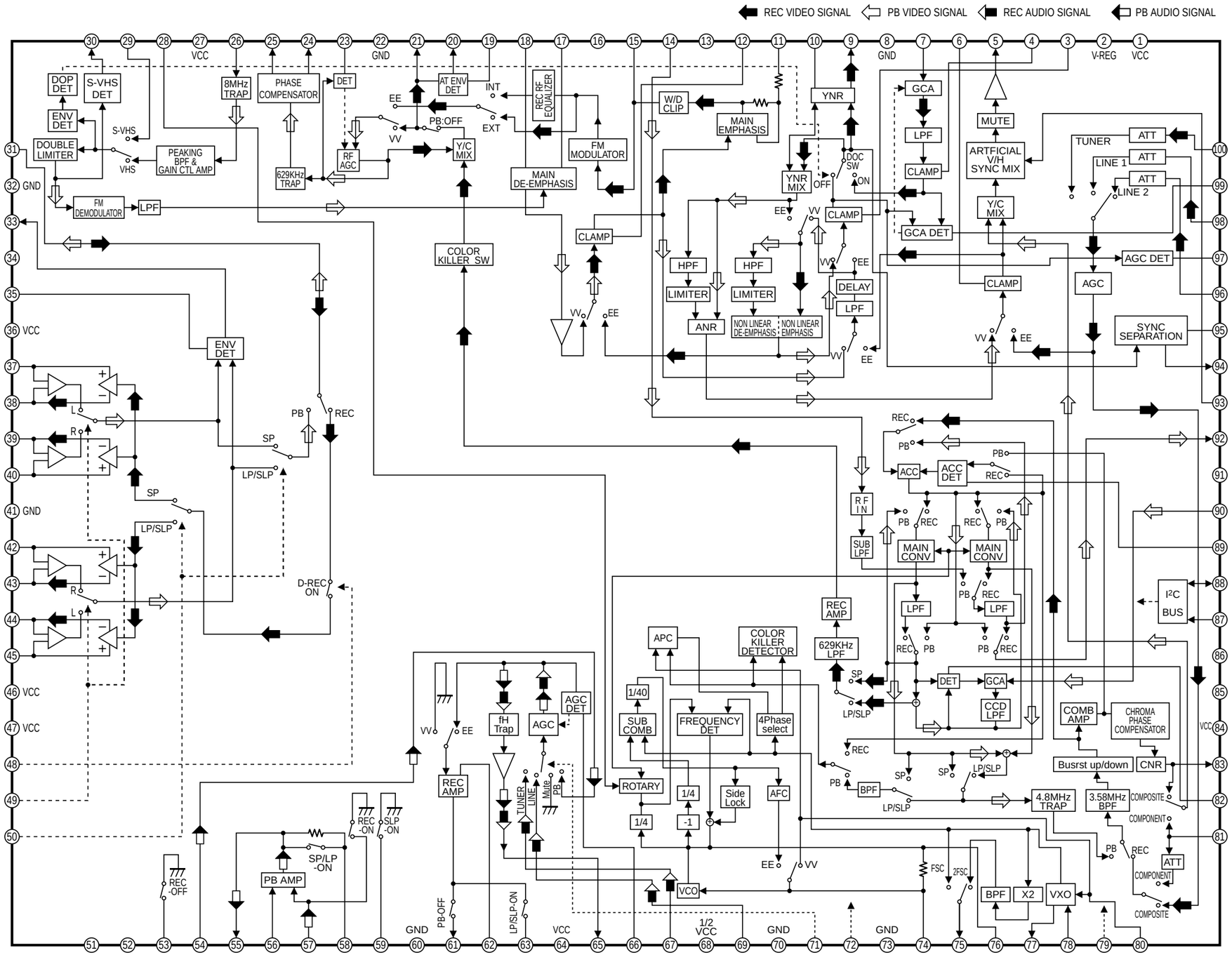

AG-527DVDE
IC3001 DETAIL BLOCK DIAGRAM

MAIN III (TV Y/C PROCESS) SCHEMATIC DIAGRAM

IMPORTANT SAFETY NOTICE:
COMPONENTS IDENTIFIED BY THE SIGN ⚠ HAVE SPECIAL CHARACTERISTICS IMPORTANT FOR SAFETY. WHEN REPLACING ANY OF THESE COMPONENTS, USE ONLY THE SPECIFIED PARTS.

NOTE:
PARTS ENCLOSED IN DASHED LINES MARKED "PT" ARE NOT USED.

NOTE:
FOR SCHEMATIC DIAGRAM AND CIRCUIT BOARD LAYOUT NOTES, REFER TO BEGINNING OF SCHEMATIC SECTION.

NOTE: For placing a purchase order of the parts, be sure to use the part number listed in the parts list. Do not use the part number on this diagram.

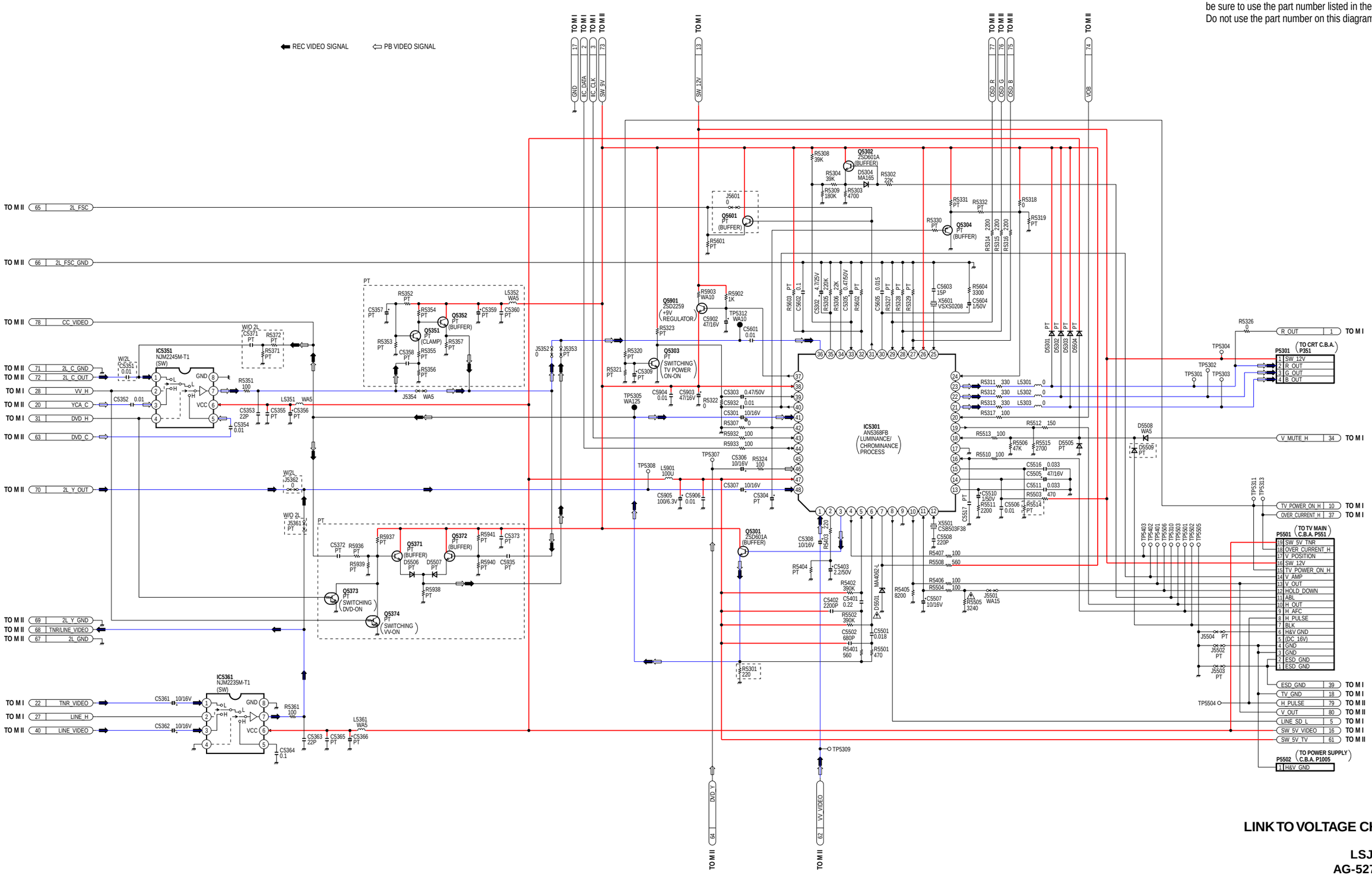

LINK TO VOLTAGE CHART

LSJB2021
AG-527DVDE
MAIN III SCHEMATIC DIAGRAM

IC5301 LUMINANCE/CHROMINANCE PROCESS IC- DETAIL BLOCK DIAGRAM

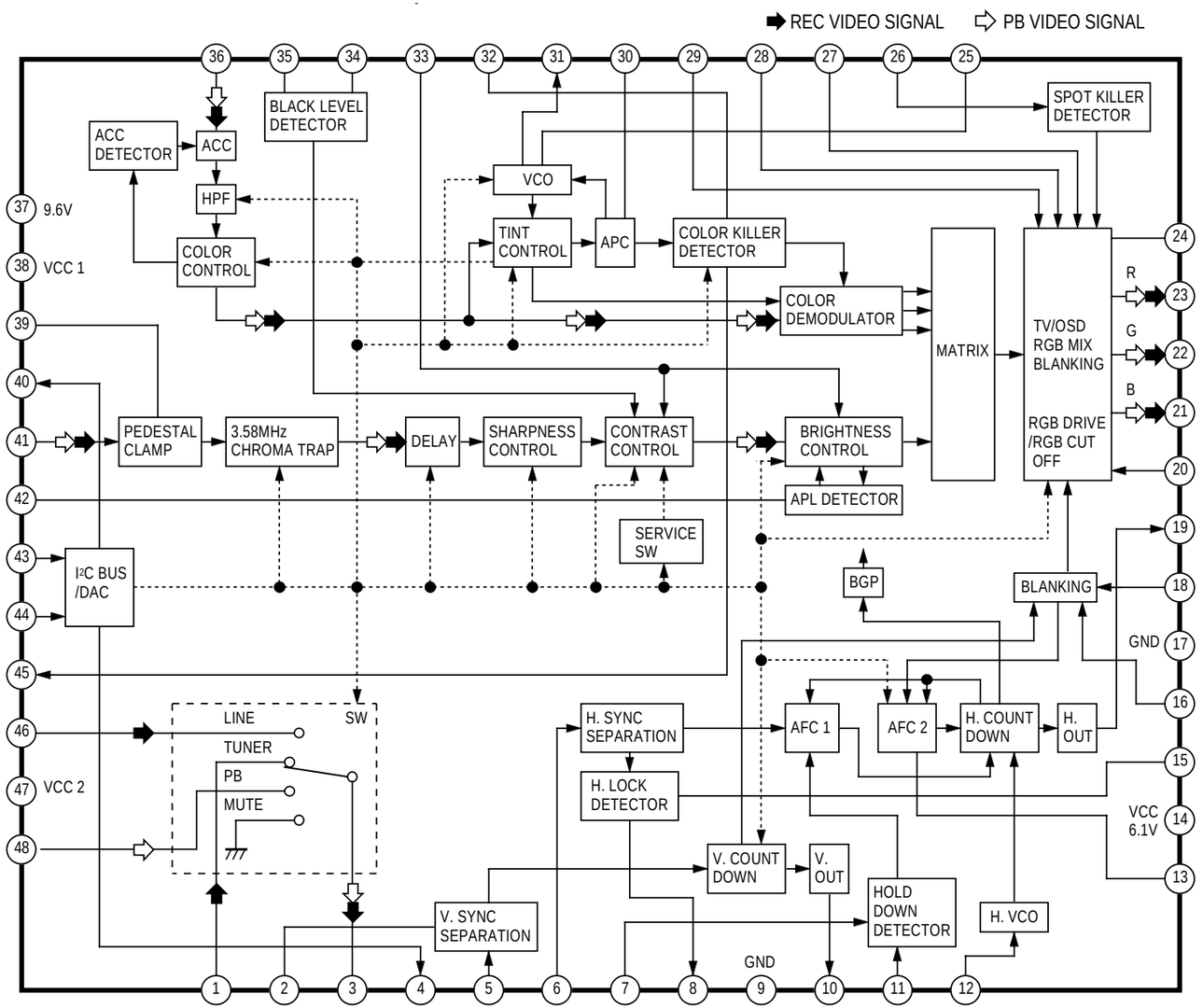

MAIN IV (POWER SUPPLY) SCHEMATIC DIAGRAM

NOTE:
PARTS ENCLOSED IN DASHED LINES MARKED "PT" ARE NOT USED.

NOTE:
FOR SCHEMATIC DIAGRAM AND CIRCUIT BOARD LAYOUT NOTES, REFER TO BEGINNING OF SCHEMATIC SECTION.

NOTE: For placing a purchase order of the parts, be sure to use the part number listed in the parts list. Do not use the part number on this diagram.

CAUTION: FOR CONTINUED PROTECTION AGAINST FIRE HAZARD, REPLACE ONLY WITH THE SAME TYPE 1.6A 125/250V FUSE.
ATTENTION: POUR UNE PROTECTION CONTINUE LES RISQUES D'T INCENDIE N'I UTILISERQUE DES FUSIBLE DE MÉME TYPE 1.6A 125/250V

IMPORTANT SAFETY NOTICE:
COMPONENTS IDENTIFIED BY THE SIGN ⚠ HAVE SPECIAL CHARACTERISTICS IMPORTANT FOR SAFETY. WHEN REPLACING ANY OF THESE COMPONENTS, USE ONLY THE SPECIFIED PARTS.

HOT CIRCUIT. BE CAREFUL AND USE AN ISOLATION TRANSFORMER WHEN SERVICING.

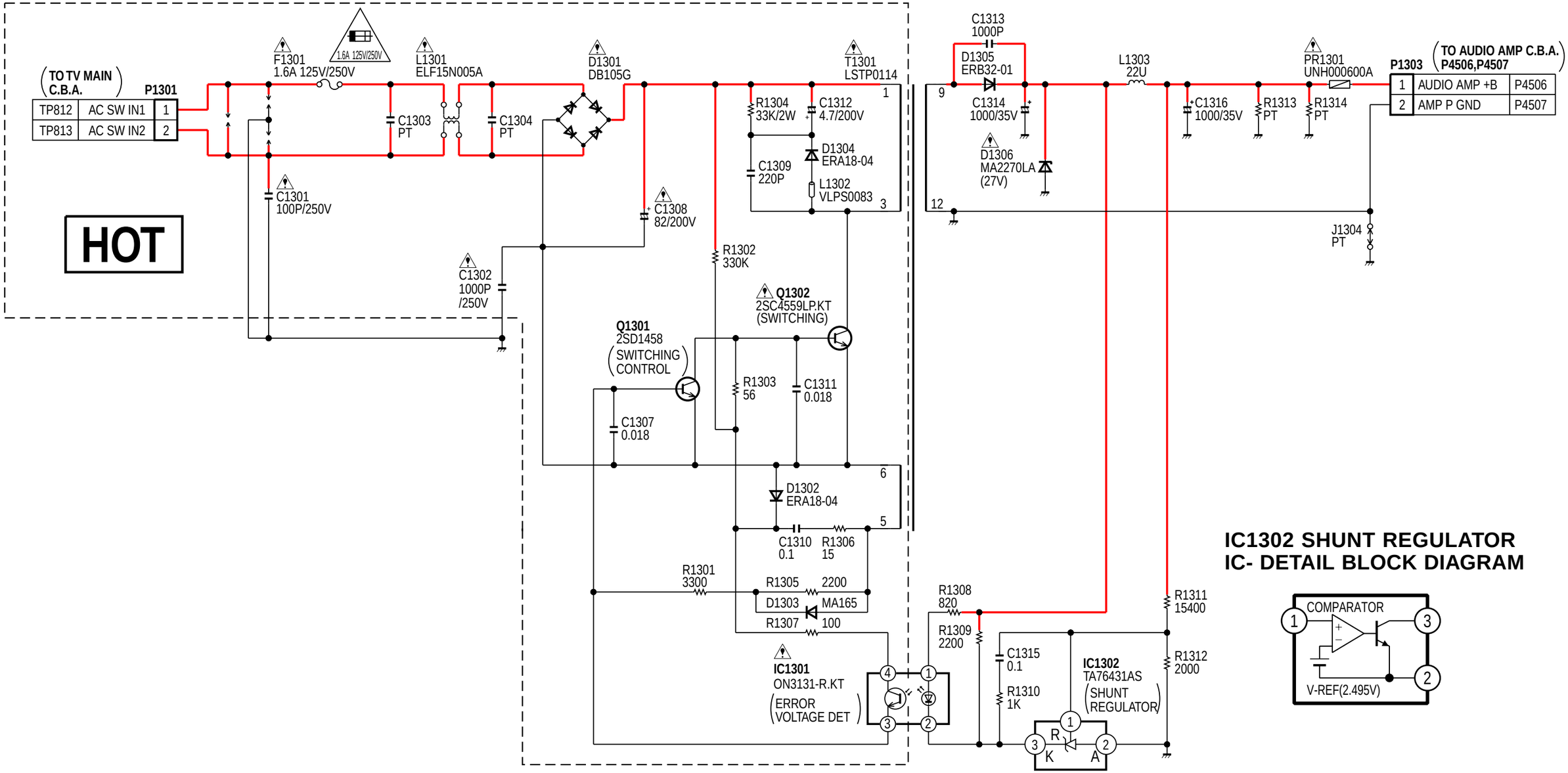

IC1302 SHUNT REGULATOR IC- DETAIL BLOCK DIAGRAM

LINK TO VOLTAGE CHART

LSJB2021
AG-527DVDE
MAIN IV SCHEMATIC DIAGRAM

AUDIO I SCHEMATIC DIAGRAM

NOTE:
PARTS ENCLOSED IN DASHED LINES MARKED "PT" ARE NOT USED.

NOTE:
FOR SCHEMATIC DIAGRAM AND CIRCUIT BOARD LAYOUT NOTES, REFER TO BEGINNING OF SCHEMATIC SECTION.

NOTE: For placing a purchase order of the parts, be sure to use the part number listed in the parts list. Do not use the part number on this diagram.

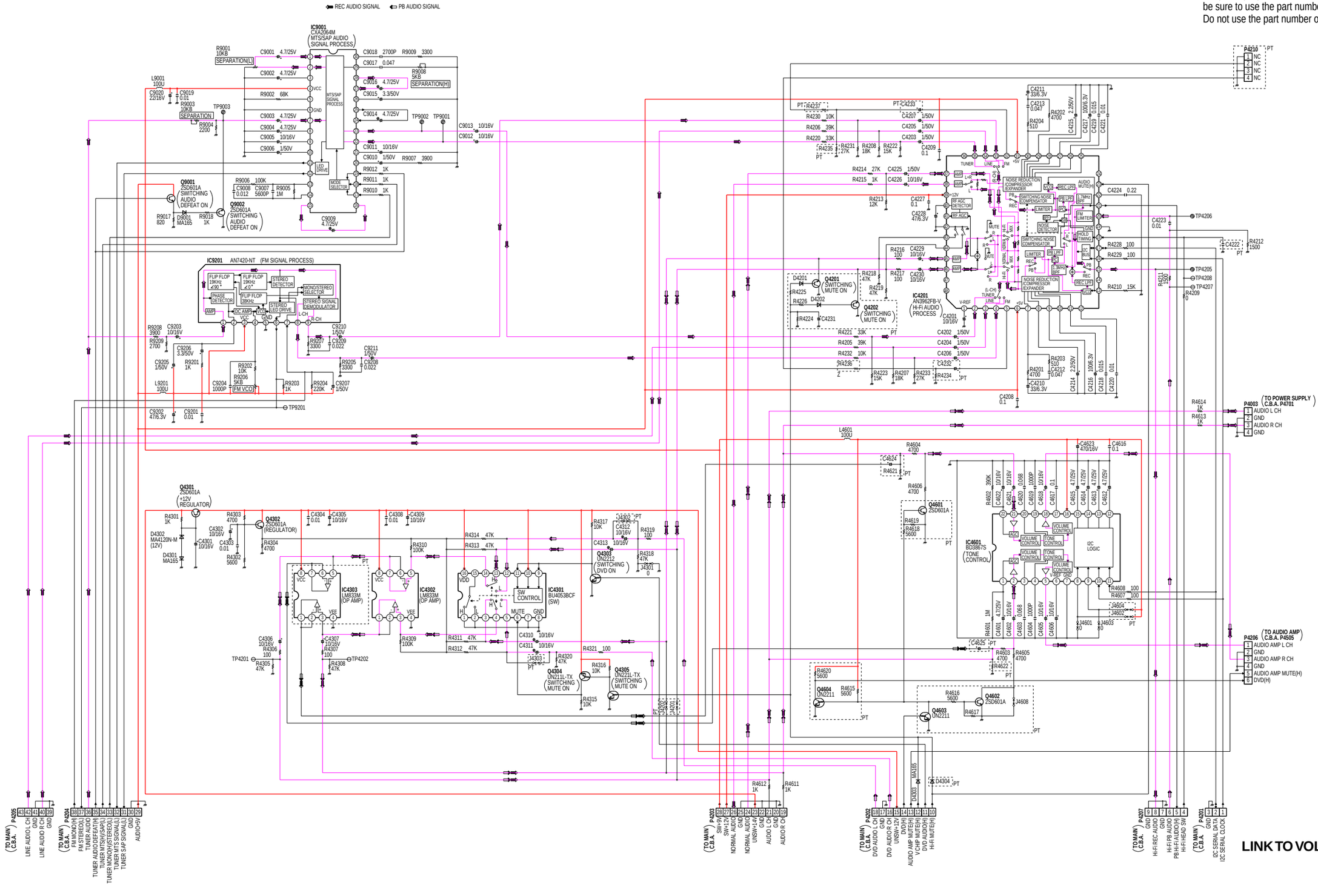

LINK TO VOLTAGE CHART

VJPS4038
AG-527DVDE
AUDIO I SCHEMATIC DIAGRAM

IC9001 MTS/SAP AUDIO PROCESS IC- DETAIL BLOCK DIAGRAM

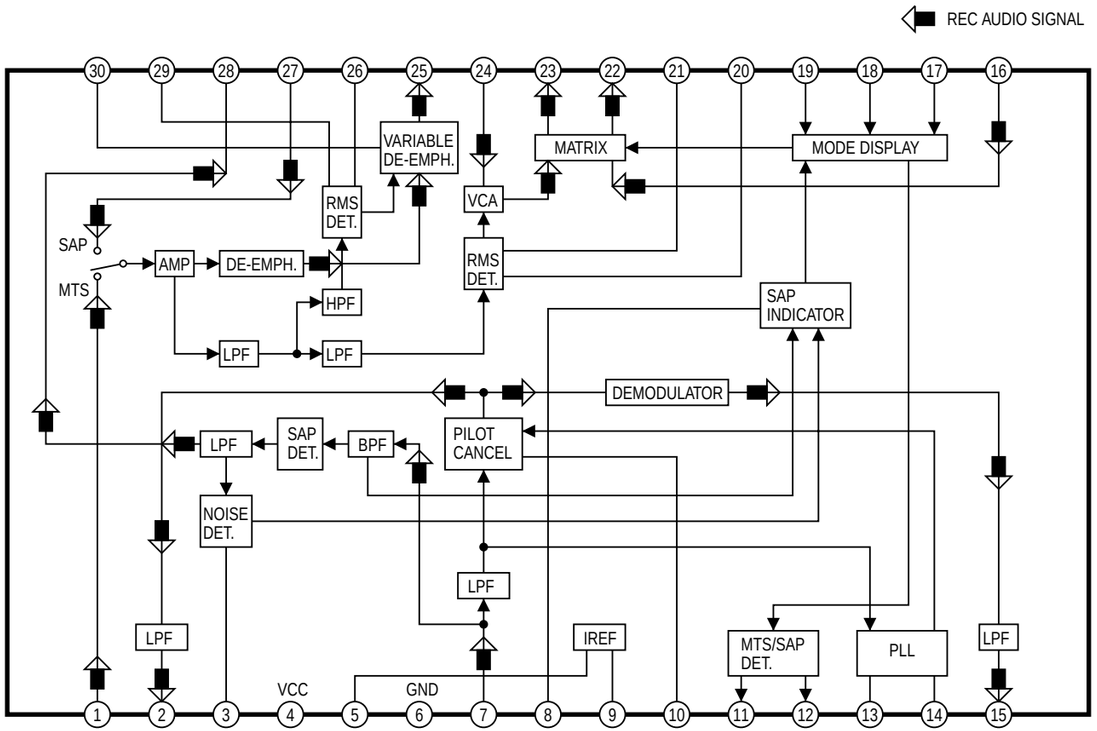

AUDIO II SCHEMATIC DIAGRAM

NOTE:
PARTS ENCLOSED IN DASHED LINES MARKED "PT" ARE NOT USED.

NOTE:
FOR SCHEMATIC DIAGRAM AND CIRCUIT BOARD LAYOUT NOTES, REFER TO BEGINNING OF SCHEMATIC SECTION.

NOTE: For placing a purchase order of the parts, be sure to use the part number listed in the parts list. Do not use the part number on this diagram.

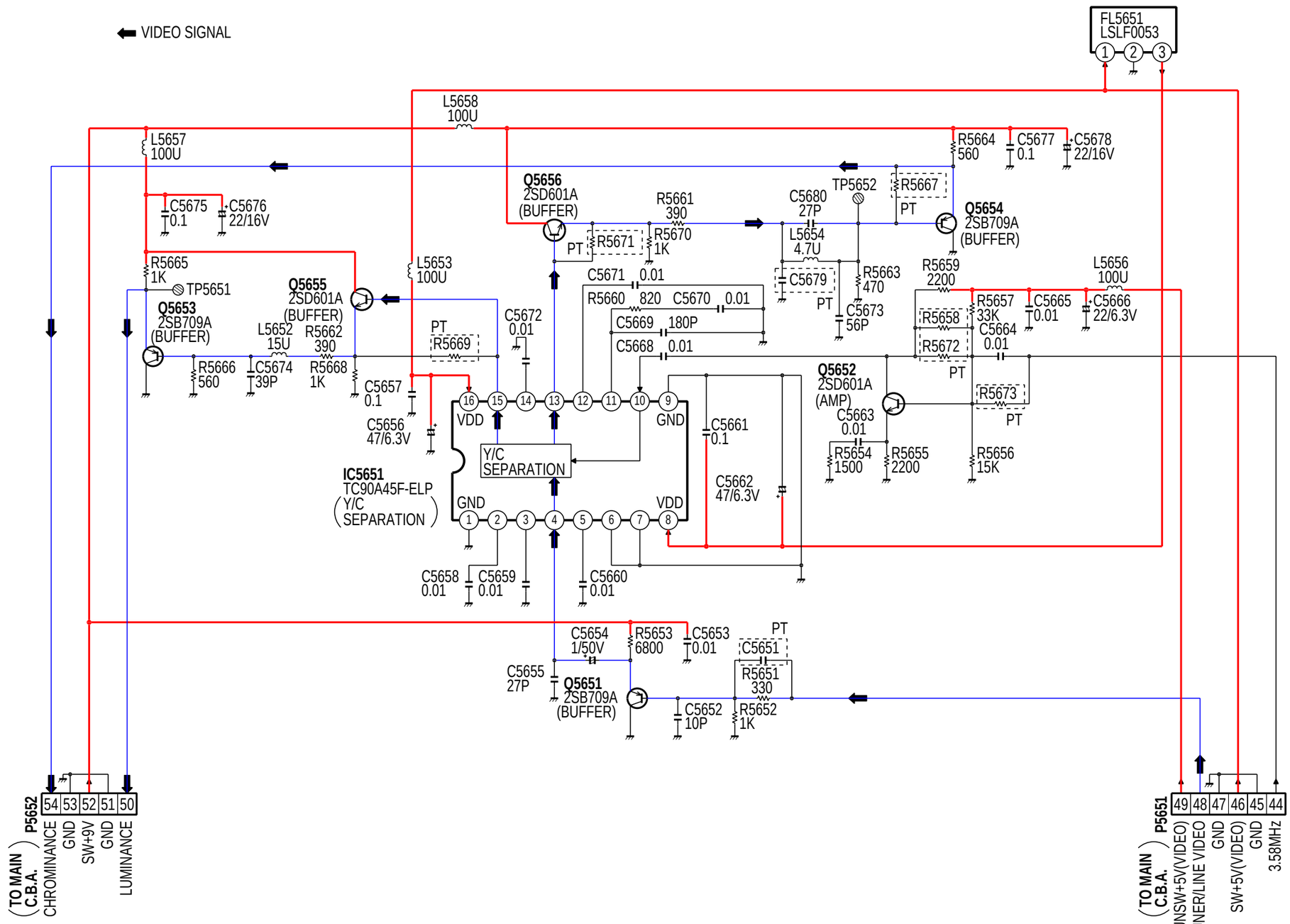

LINK TO VOLTAGE CHART

VJPS4038
AG-527DVDE
AUDIO II SCHEMATIC DIAGRAM

AUDIO AMP SCHEMATIC DIAGRAM

NOTE:
PARTS ENCLOSED IN DASHED LINES MARKED "PT" ARE NOT USED.

NOTE:
FOR SCHEMATIC DIAGRAM AND CIRCUIT BOARD LAYOUT NOTES, REFER TO BEGINNING OF SCHEMATIC SECTION.

NOTE: For placing a purchase order of the parts, be sure to use the part number listed in the parts list. Do not use the part number on this diagram.

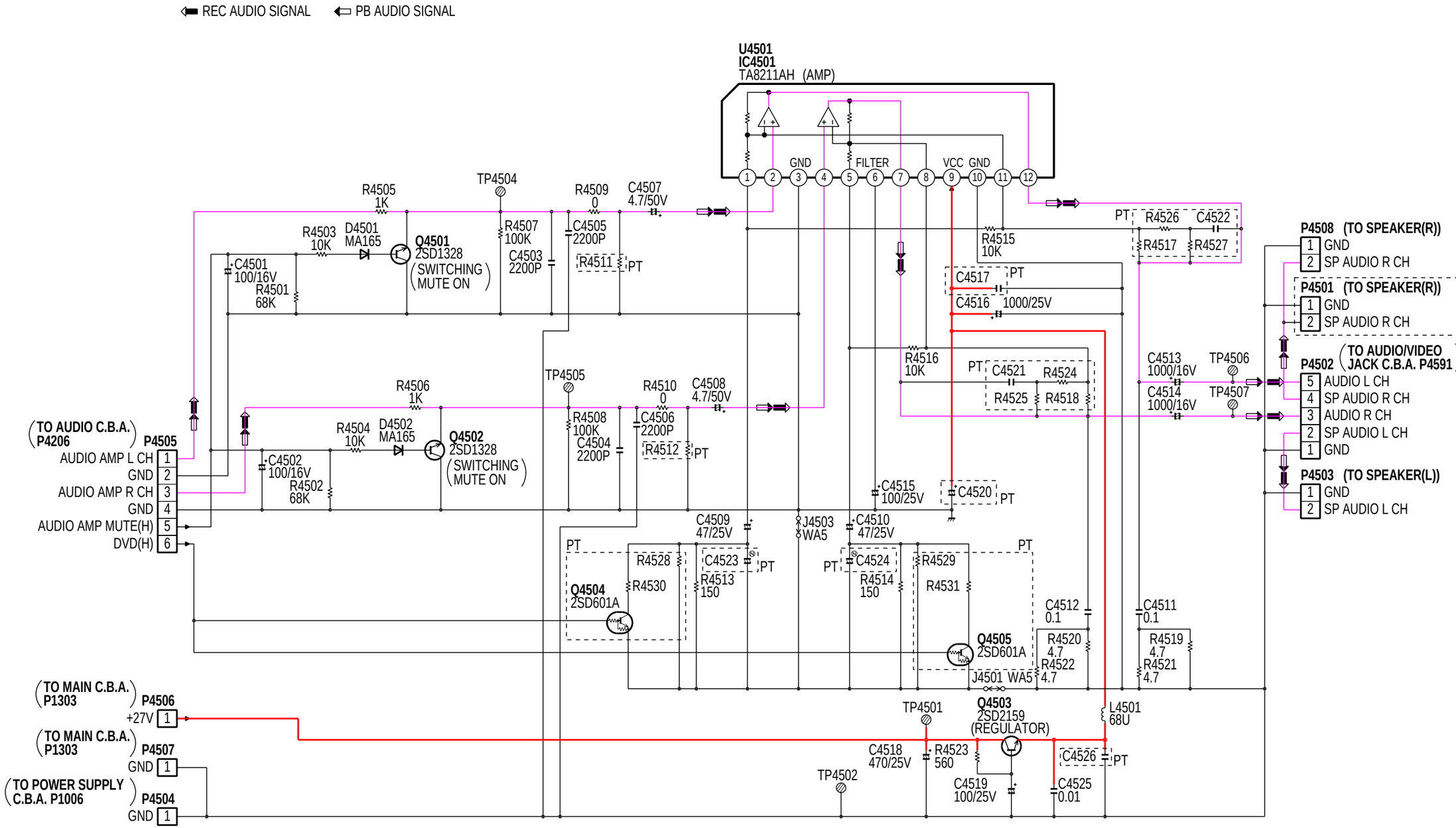

LINK TO VOLTAGE CHART

VJPS4039
AG-527DVDE
AUDIO AMP SCHEMATIC DIAGRAM

POWER SUPPLY SCHEMATIC DIAGRAM

NOTE:
PARTS ENCLOSED IN DASHED LINES MARKED "PT" ARE NOT USED.

NOTE:
FOR SCHEMATIC DIAGRAM AND CIRCUIT BOARD LAYOUT NOTES, REFER TO BEGINNING OF SCHEMATIC SECTION.

NOTE: For placing a purchase order of the parts, be sure to use the part number listed in the parts list. Do not use the part number on this diagram.

CAUTION: FOR CONTINUED PROTECTION AGAINST FIRE HAZARD, REPLACE ONLY WITH THE SAME TYPE 3A 125V/250V FUSE.
ATTENTION: POUR UNE PROTECTION CONTINUE LES RISQUES D' INCENDIE N' UTILISERQUE DES FUSIBLE DE MÉME TYPE 3A 125V/250V

IMPORTANT SAFETY NOTICE:
COMPONENTS IDENTIFIED BY THE SIGN ⚠ HAVE SPECIAL CHARACTERISTICS IMPORTANT FOR SAFETY. WHEN REPLACING ANY OF THESE COMPONENTS, USE ONLY THE SPECIFIED PARTS.

REC AUDIO SIGNAL
PB AUDIO SIGNAL

HOT CIRCUIT. BE CAREFUL AND USE AN ISOLATION TRANSFORMER WHEN SERVICING.

HOT

IC1002,IC1503 SHUNT REGULATOR IC- DETAIL BLOCK DIAGRAM

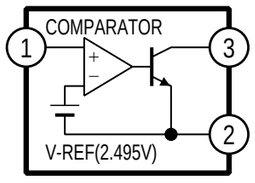

IC1501 SWITCHING CONTROL IC- DETAIL BLOCK DIAGRAM

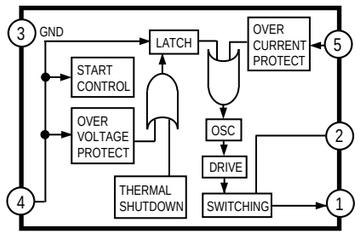

LINK TO VOLTAGE CHART

VJPS1029
AG-527DVDE
POWER SUPPLY SCHEMATIC DIAGRAM

TV MAIN SCHEMATIC DIAGRAM

NOTE:
PARTS ENCLOSED IN DASHED LINES MARKED "PT" ARE NOT USED.

NOTE:
FOR SCHEMATIC DIAGRAM AND CIRCUIT BOARD LAYOUT NOTES, REFER TO BEGINNING OF SCHEMATIC SECTION.

NOTE: For placing a purchase order of the parts, be sure to use the part number listed in the parts list. Do not use the part number on this diagram.

CAUTION: FOR CONTINUED PROTECTION AGAINST FIRE HAZARD, REPLACE ONLY WITH THE SAME TYPE 4A 125/250V FUSE.
ATTENTION: POUR UNE PROTECTION CONTINUE LES RISQUES D' INCENDIE N' UTILISERQUE DES FUSIBLE DE MÉME TYPE 4A 125/250V

IMPORTANT SAFETY NOTICE:
COMPONENTS IDENTIFIED BY THE SIGN ⚠ HAVE SPECIAL CHARACTERISTICS IMPORTANT FOR SAFETY. WHEN REPLACING ANY OF THESE COMPONENTS, USE ONLY THE SPECIFIED PARTS.

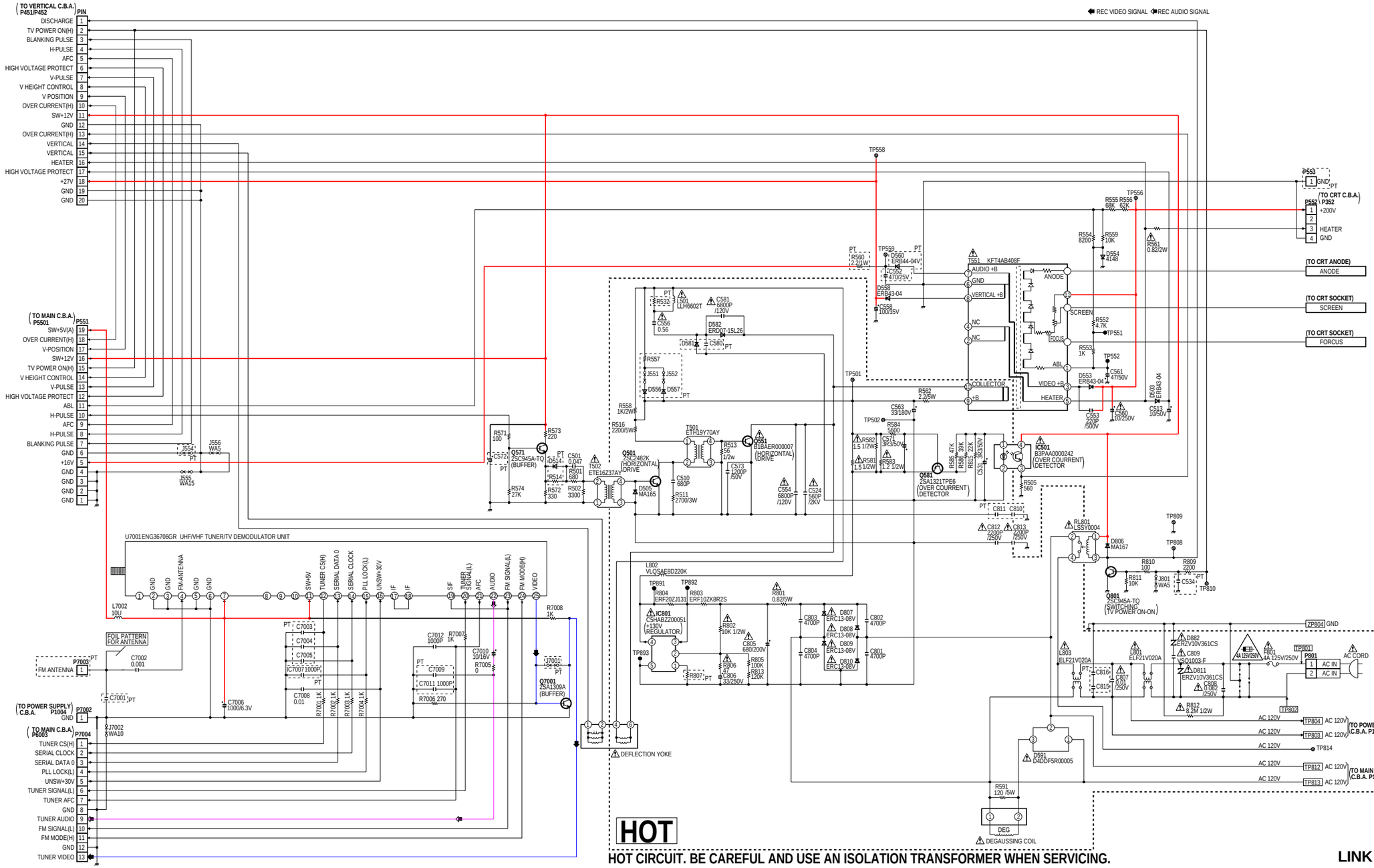

HOT

HOT CIRCUIT. BE CAREFUL AND USE AN ISOLATION TRANSFORMER WHEN SERVICING.

LINK TO VOLTAGE CHART

LRP61012
AG-527DVDE
TV MAIN SCHEMATIC DIAGRAM

CRT SCHEMATIC DIAGRAM

NOTE:
PARTS ENCLOSED IN DASHED LINES MARKED "PT" ARE NOT USED.

IMPORTANT SAFETY NOTICE:
COMPONENTS IDENTIFIED BY THE SIGN ⚠ HAVE
SPECIAL CHARACTERISTICS IMPORTANT FOR SAFETY.
WHEN REPLACING ANY OF THESE COMPONENTS,
USE ONLY THE SPECIFIED PARTS.

NOTE:
FOR SCHEMATIC DIAGRAM AND CIRCUIT BOARD LAYOUT NOTES,
REFER TO BEGINNING OF SCHEMATIC SECTION.

NOTE: For placing a purchase order of the parts,
be sure to use the part number listed in the parts list.
Do not use the part number on this diagram.

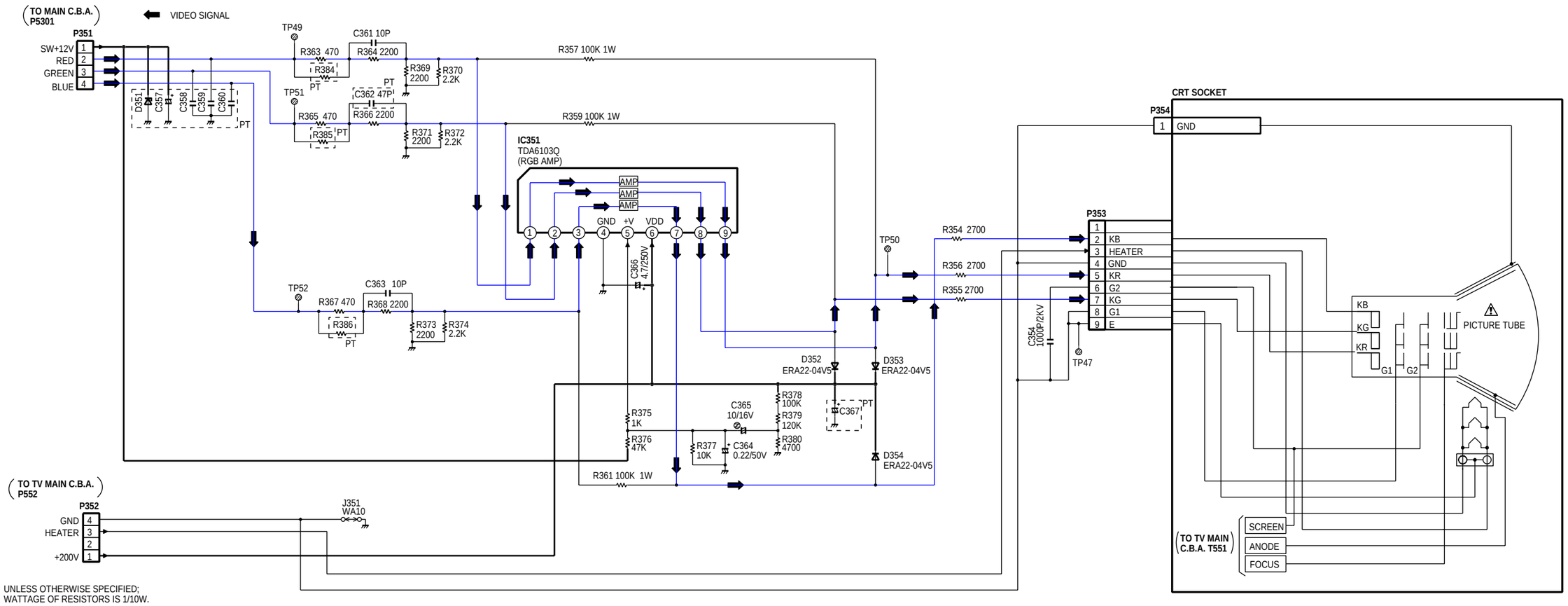

UNLESS OTHERWISE SPECIFIED;
WATTAGE OF RESISTORS IS 1/10W.

LINK TO VOLTAGE CHART

LRP63013
AG-527DVDE
CRT SCHEMATIC DIAGRAM

VERTICAL SCHEMATIC DIAGRAM

IMPORTANT SAFETY NOTICE:
COMPONENTS IDENTIFIED BY THE SIGN ⚠ HAVE SPECIAL CHARACTERISTICS IMPORTANT FOR SAFETY. WHEN REPLACING ANY OF THESE COMPONENTS, USE ONLY THE SPECIFIED PARTS.

NOTE:
PARTS ENCLOSED IN DASHED LINES MARKED "PT" ARE NOT USED.

NOTE:
FOR SCHEMATIC DIAGRAM AND CIRCUIT BOARD LAYOUT NOTES, REFER TO BEGINNING OF SCHEMATIC SECTION.

NOTE: For placing a purchase order of the parts, be sure to use the part number listed in the parts list. Do not use the part number on this diagram.

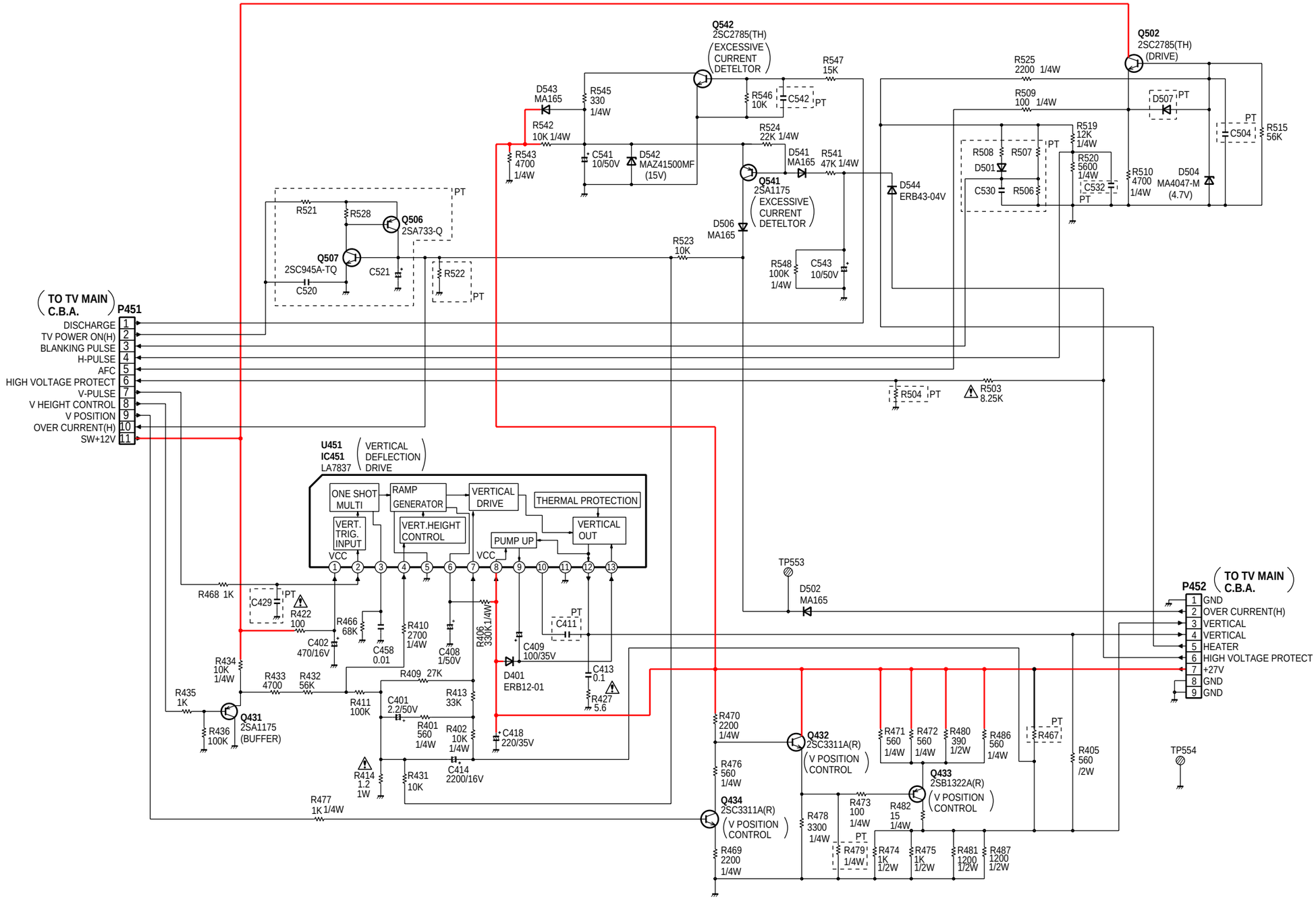

LINK TO VOLTAGE CHART

LRP63019
AG-527DVDE
VERTICAL SCHEMATIC DIAGRAM

OPERATION SCHEMATIC DIAGRAM

NOTE:
PARTS ENCLOSED IN DASHED LINES MARKED "PT" ARE NOT USED.

NOTE:
FOR SCHEMATIC DIAGRAM AND CIRCUIT BOARD LAYOUT NOTES,
REFER TO BEGINNING OF SCHEMATIC SECTION.

NOTE: For placing a purchase order of the parts,
be sure to use the part number listed in the parts list.
Do not use the part number on this diagram.

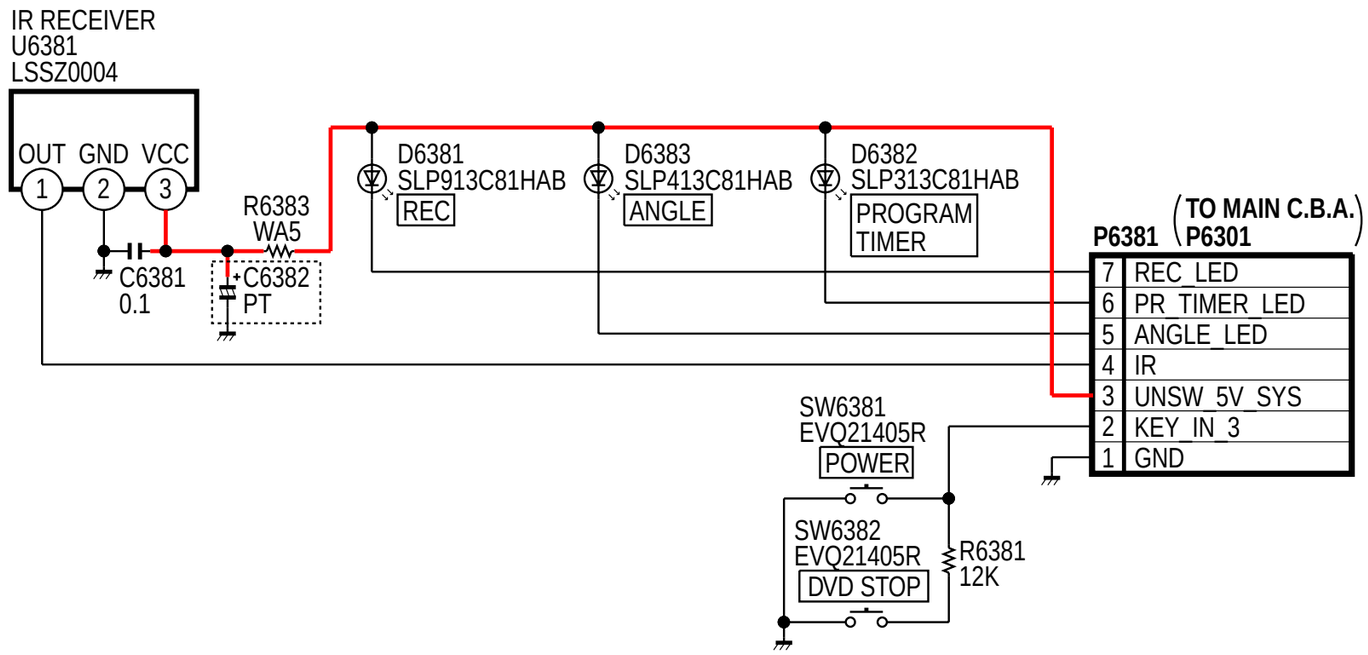

AUDIO / VIDEO JACK SCHEMATIC DIAGRAM

NOTE:
PARTS ENCLOSED IN DASHED LINES MARKED "PT" ARE NOT USED.

NOTE:
FOR SCHEMATIC DIAGRAM AND CIRCUIT BOARD LAYOUT NOTES, REFER TO BEGINNING OF SCHEMATIC SECTION.

NOTE: For placing a purchase order of the parts, be sure to use the part number listed in the parts list. Do not use the part number on this diagram.

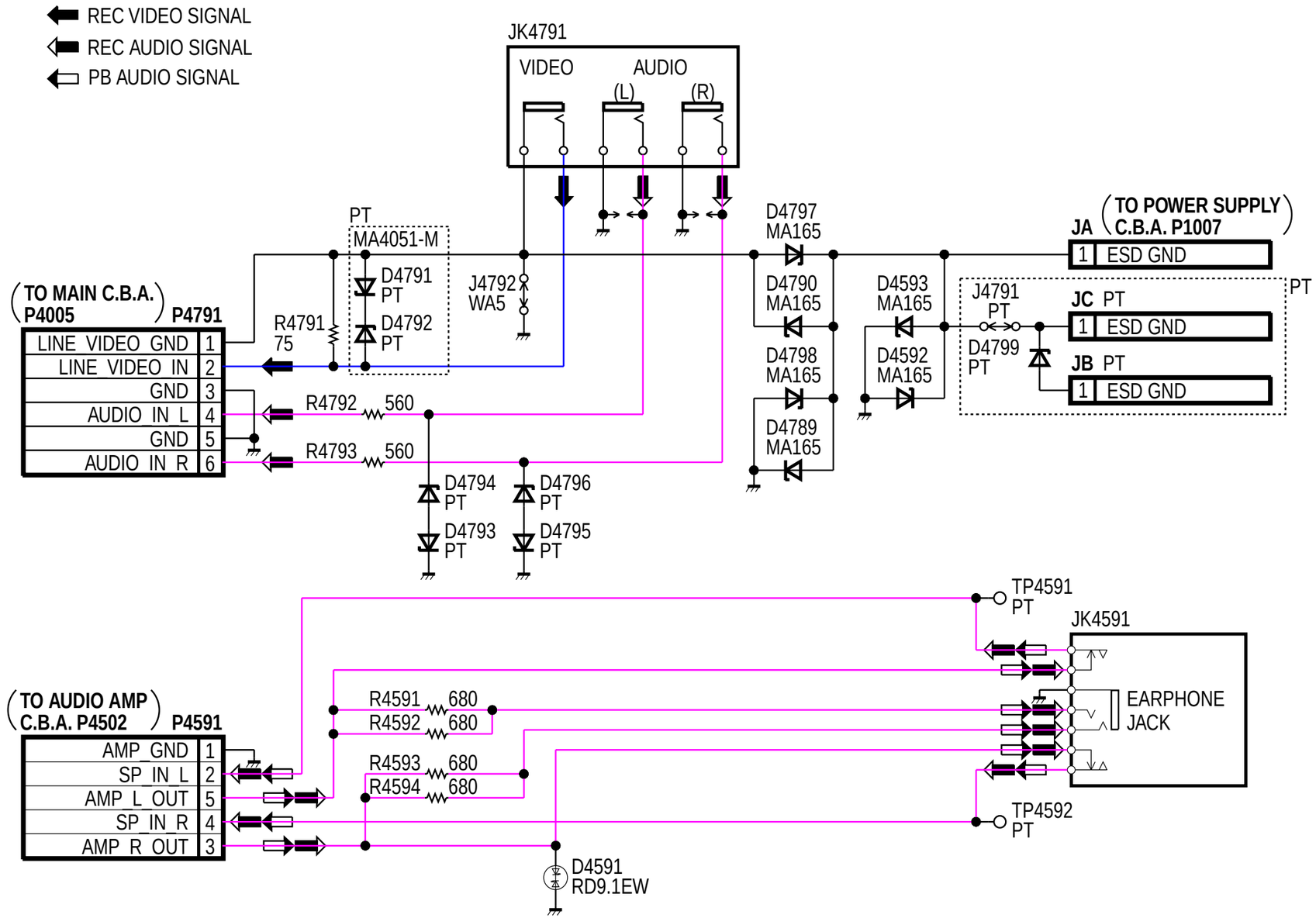

LINK TO VOLTAGE CHART

LSJP2023
AG-527DVDE
AUDIO / VIDEO JACK SCHEMATIC DIAGRAM

Hi-Fi AUDIO/VIDEO HEAD AMP SCHEMATIC DIAGRAM

NOTE:
PARTS ENCLOSED IN DASHED LINES MARKED "PT" ARE NOT USED.

NOTE:
FOR SCHEMATIC DIAGRAM AND CIRCUIT BOARD LAYOUT NOTES, REFER TO BEGINNING OF SCHEMATIC SECTION.

NOTE: For placing a purchase order of the parts, be sure to use the part number listed in the parts list. Do not use the part number on this diagram.

REC VIDEO SIGNAL
REC AUDIO SIGNAL
PB VIDEO SIGNAL
PB AUDIO SIGNAL

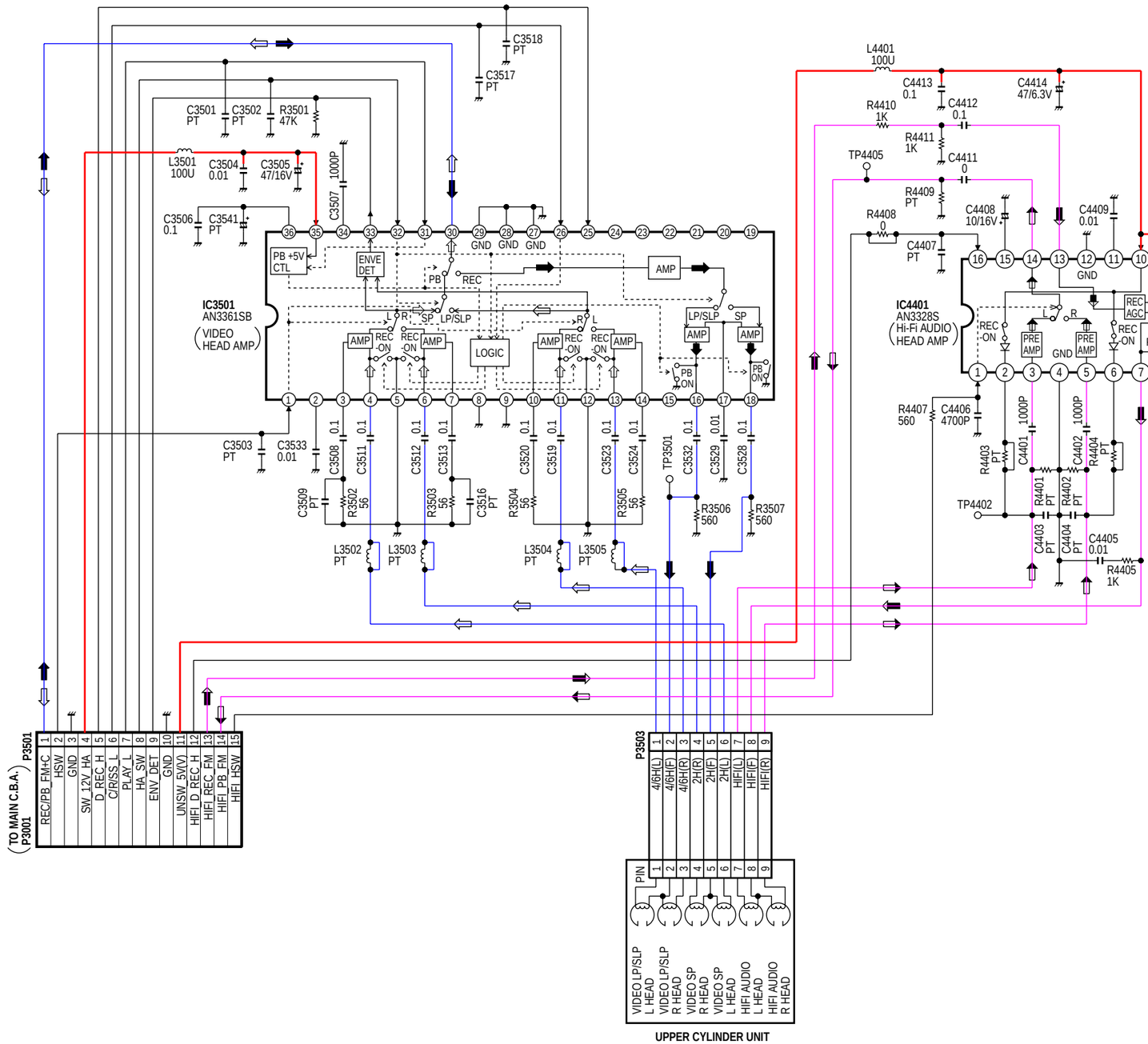

LINK TO VOLTAGE CHART

LSJP2010
AG-527DVDE
Hi-Fi AUDIO/VIDEO HEAD AMP SCHEMATIC DIAGRAM

DVD DECODER I SCHEMATIC DIAGRAM

NOTE:
PARTS ENCLOSED IN DASHED LINES MARKED "PT" ARE NOT USED.

NOTE:
FOR SCHEMATIC DIAGRAM AND CIRCUIT BOARD LAYOUT NOTES, REFER TO BEGINNING OF SCHEMATIC SECTION.

NOTE: For placing a purchase order of the parts, be sure to use the part number listed in the parts list. Do not use the part number on this diagram.

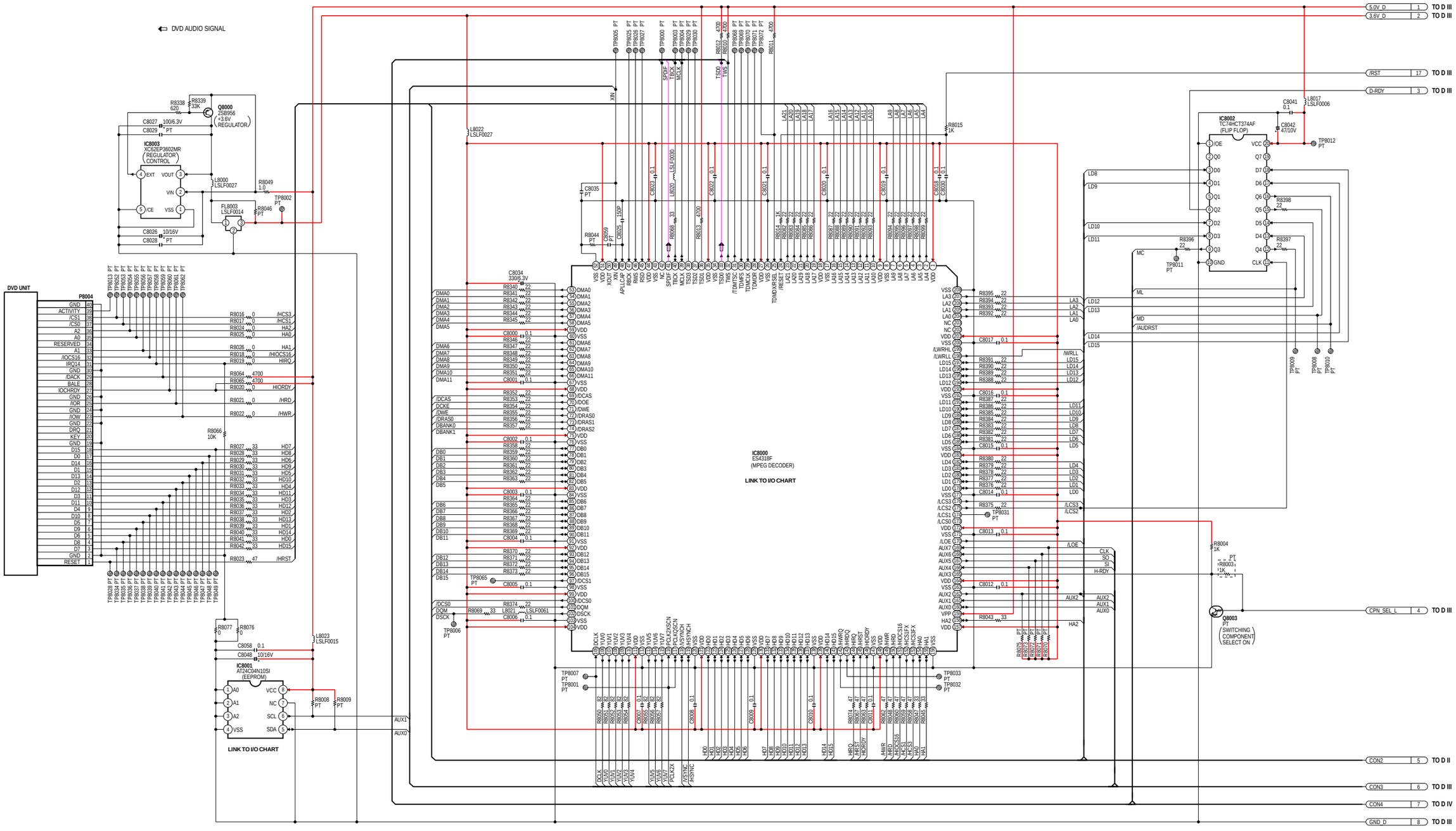

LINK TO VOLTAGE CHART

LSJB2007
AG-527DVDE
DVD DECODER I SCHEMATIC DIAGRAM

I/O CHART OF IC8000

Pin No.	I/O	Signal Name	Description
1	I	VDD	+3.6V
2	O	LA4	Memory address 4
3	O	LA5	Memory address 5
4	O	LA6	Memory address 6
5	O	LA7	Memory address 7
6	O	LA8	Memory address 8
7	O	LA9	Memory address 9
8	-	VSS	Ground
9	I	VDD	+3.6V
10	O	LA10	Memory address 10
11	O	LA11	Memory address 11
12	O	LA12	Memory address 12
13	O	LA13	Memory address 13
14	O	LA14	Memory address 14
15	O	LA15	Memory address 15
16	O	LA16	Memory address 16
17	-	VSS	Ground
18	I	VDD	+3.6V
19	O	LA17	Memory address 17
20	O	LA18	Memory address 18
21	O	LA19	Memory address 19
22	O	LA20	Memory address 20
23	O	LA21	Memory address 21
24	I	/RESET	Reset : low
25	-	TDMDX/RSEL	(Not used)
26	-	VSS	Ground
27	I	VDD	+3.6V
28	-	TDMDR	(Not used)
29	-	TDMCLK	(Not used)
30	-	TDMFS	(Not used)
31	-	/TDMTSC	(Not used)
32	O	TWS	Audio transmit frame sync
33	O	TSD0	Audio serial data
34	-	VSS	Ground
35	I	VDD	+3.6V
36	-	TSD1	(Not used)
37	-	TSD2	(Not used)
38	-	TSD3	(Not used)
39	I/O	MCLK	Audio master clock
40	I/O	TBCK	Audio transmit bit clock
41	O	SPDIF	IEC958 audio data
42	-	NC	(Not used)
43	-	VSS	Ground
44	I	VDD	+3.6V
45	-	RSD	(Not used)
46	-	RWS	(Not used)
47	-	RBCK	(Not used)
48	-	APLLCAP	(Not used)
49	I	XIN	27MHz clock
50	-	XOUT	(Not used)
51	I	VDD	+3.6V
52	-	VSS	Ground
53	O	DMA0	SDRAM address 0
54	O	DMA1	SDRAM address 1
55	O	DMA2	SDRAM address 2
56	O	DMA3	SDRAM address 3
57	O	DMA4	SDRAM address 4
58	O	DMA5	SDRAM address 5
59	I	VDD	+3.6V
60	-	VSS	Ground
61	O	DMA6	SDRAM address 6
62	O	DMA7	SDRAM address 7
63	O	DMA8	SDRAM address 8
64	O	DMA9	SDRAM address 9
65	O	DMA10	SDRAM address 10
66	O	DMA11	SDRAM address 11
67	-	VSS	Ground
68	I	VDD	+3.6V
69	O	/DCAS	Column address strobe : low
70	-	/DOE	(Not used)
71	O	/DWE	Write enable : low
72	O	/DRAS0	Row address strobe : low
73	-	/DRAS1	(Not used)
74	-	/DRAS2	(Not used)
75	I	VDD	+3.6V
76	-	VSS	Ground
77	I/O	DB0	SDRAM data 0
78	I/O	DB1	SDRAM data 1
79	I/O	DB2	SDRAM data 2
80	I/O	DB3	SDRAM data 3
81	I/O	DB4	SDRAM data 4
82	I/O	DB5	SDRAM data 5
83	I	VDD	+3.6V
84	-	VSS	Ground
85	I/O	DB6	SDRAM data 6
86	I/O	DB7	SDRAM data 7
87	I/O	DB8	SDRAM data 8
88	I/O	DB9	SDRAM data 9
89	I/O	DB10	SDRAM data 10
90	I/O	DB11	SDRAM data 11
91	-	VSS	Ground
92	I	VDD	+3.6V
93	I/O	DB12	SDRAM data 12
94	I/O	DB13	SDRAM data 13
95	I/O	DB14	SDRAM data 14
96	I/O	DB15	SDRAM data 15
97	O	/DCS1	SDRAM chip select : low
98	-	VSS	Ground
99	I	VDD	+3.6V
100	O	/DCS0	SDRAM chip select : low
101	O	DQM	Data input/output mask
102	O	DSCK	SDRAM clock
103	-	VSS	Ground
104	I	VDD	+3.6V
105	I	DCLK	27MHz clock
106	O	YUV0	YUV data 0
107	O	YUV1	YUV data 1
108	O	YUV2	YUV data 2
109	O	YUV3	YUV data 3
110	O	YUV4	YUV data 4
111	I	VDD	+3.6V
112	-	VSS	Ground
113	I	YUV5	YUV data 5
114	I	YUV6	YUV data 6
115	I	YUV7	YUV data 7
116	I	PCLK2XSCN	2X pixel clock
117	I/O	PCLKQSCN	pixel clock
118	I/O	/VSYNCH	V-sync signal
119	I/O	/HSYNCH	V-sync signal
120	-	VSS	Ground
121	I	VDD	+3.6V
122	I/O	HD0	Host data 0
123	I/O	HD1	Host data 1
124	I/O	HD2	Host data 2
125	I/O	HD3	Host data 3
126	I/O	HD4	Host data 4
127	I/O	HD5	Host data 5
128	I/O	HD6	Host data 6
129	-	VSS	Ground
130	I	VDD	+3.6V
131	I/O	HD7	Host data 7
132	I/O	HD8	Host data 8
133	I/O	HD9	Host data 9
134	I/O	HD10	Host data 10
135	I/O	HD11	Host data 11
136	I/O	HD12	Host data 12
137	I/O	HD13	Host data 13
138	-	VSS	Ground
139	I	VDD	+3.6V
140	I/O	HD14	Host data 14
141	I/O	HD15	Host data 15
142	-	/HWRQ	(Not used)
143	-	/HRDQ	(Not used)
144	I/O	HIRQ	Host interrupt
145	I	/HRST	Host reset : low
146	I	HIORDY	Host I/O ready
147	-	VSS	Ground
148	I	VDD	+3.6V
149	O	/HWR	Host write request : low
150	I	/HRD	Host read request : low
151	I	/HIOCS16	Device 16-bit data transfer
152	O	/HCS1FX	Host select 1
153	O	/HCS3FX	Host select 3
154	I/O	HA0	Host address 0
155	I/O	HA1	Host address 1
156	-	VSS	Ground
157	I	VDD	+3.6V
158	I/O	HA2	Host address 2
159	I	VPP	Peripheral protection voltage
160	I/O	AUX0	I2C serial data
161	I	AUX1	I2C serial clock
162	O	AUX2	DVD ready (Busy : low)
163	-	VSS	Ground
164	I	VDD	+3.6V
165	-	AUX3	(Not used)
166	I	AUX4	DVD chip select : low
167	O	AUX5	Serial data 1
168	I	AUX6	Serial data 0
169	I	AUX7	Serial clock
170	O	/LOE	Output enable : low
171	-	VSS	Ground
172	I	VDD	+3.6V
173	-	/LCS0	(Not used)
174	-	/LCS1	(Not used)
175	O	/LCS2	Clock
176	O	/LCS3	Memory chip select : low
177	-	VSS	Ground
178	I/O	LD0	Memory data 0
179	I/O	LD1	Memory data 1
180	I/O	LD2	Memory data 2
181	I/O	LD3	Memory data 3
182	I/O	LD4	Memory data 4
183	I	VDD	+3.6V
184	-	VSS	Ground
185	I/O	LD5	Memory data 5
186	I/O	LD6	Memory data 6
187	I/O	LD7	Memory data 7
188	I/O	LD8	Memory data 8
189	I/O	LD9	Memory data 9
190	I/O	LD10	Memory data 10
191	I/O	LD11	Memory data 11
192	-	VSS	Ground
193	I	VDD	+3.6V
194	I/O	LD12	Memory data 12
195	I/O	LD13	Memory data 13
196	I/O	LD14	Memory data 14
197	I/O	LD15	Memory data 15
198	O	/LWRLL	Write enable : low
199	-	/LWRHL	(Not used)
200	-	VSS	Ground
201	I	VDD	+3.6V
202	-	NC	(Not used)
203	-	NC	(Not used)
204	O	LA0	Memory address 0
205	O	LA1	Memory address 1
206	O	LA2	Memory address 2
207	O	LA3	Memory address 3
208	-	VSS	Ground

IC8002 FLIP FLOP IC-DETAIL BLOCK DIAGRAM

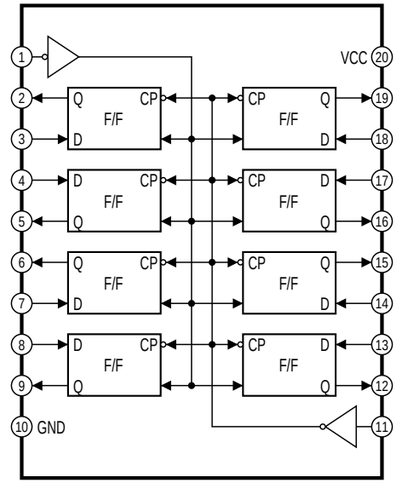

IC8003 REGULATOR CONTROL IC-DETAIL BLOCK DIAGRAM

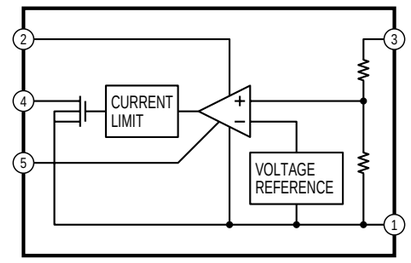

I/O CHART OF IC8001

Pin No.	I/O	Signal Name	Description
1	-	A0	(Not used)
2	-	A1	(Not used)
3	-	A2	(Not used)
4	-	VSS	Ground
5	I/O	SDA	I2C Serial data
6	O	SCL	I2C Serial clock
7	-	NC	(Not used)
8	I	VCC	+5.0V

DVD DECODER II SCHEMATIC DIAGRAM

NOTE:
PARTS ENCLOSED IN DASHED LINES MARKED "PT" ARE NOT USED.

NOTE:
FOR SCHEMATIC DIAGRAM AND CIRCUIT BOARD LAYOUT NOTES, REFER TO BEGINNING OF SCHEMATIC SECTION.

NOTE: For placing a purchase order of the parts,
be sure to use the part number listed in the parts list.
Do not use the part number on this diagram.

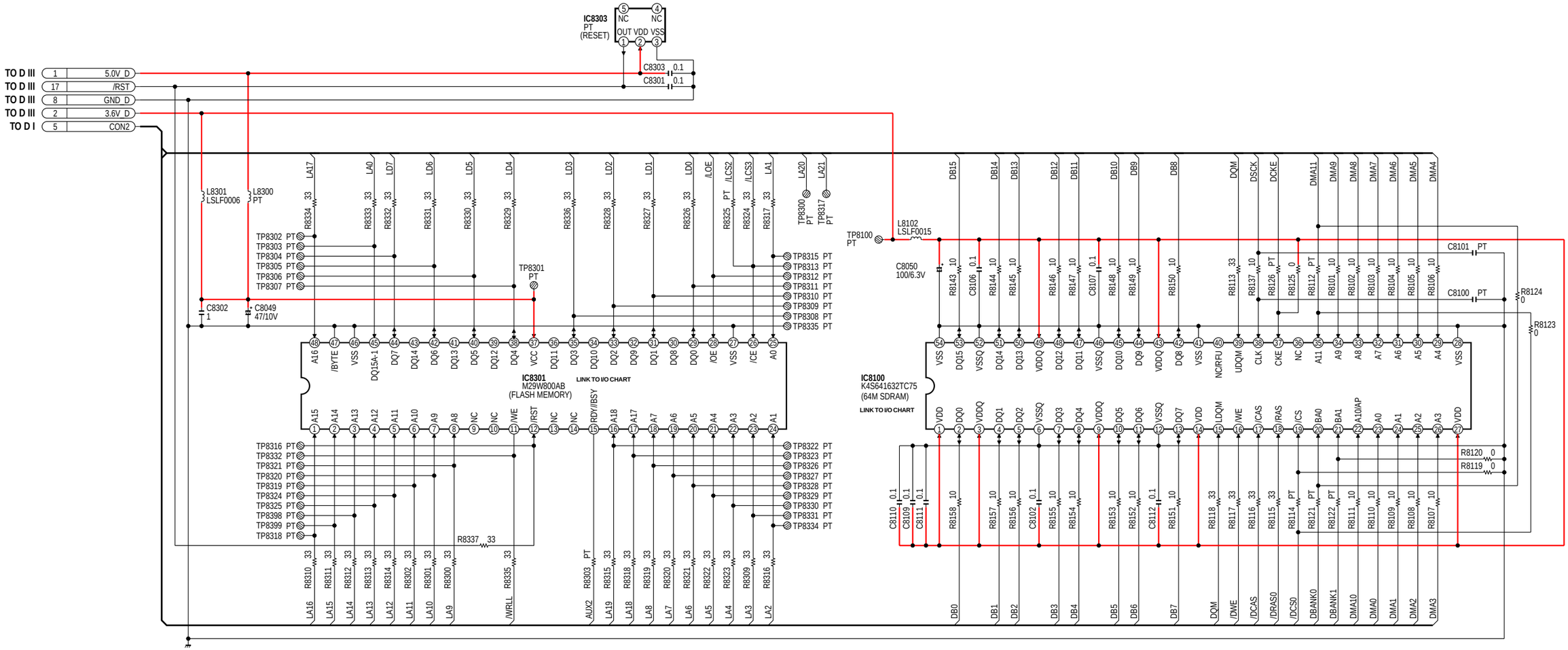

LINK TO VOLTAGE CHART

LSJB2007
AG-527DVDE
DVD DECODER II SCHEMATIC DIAGRAM

I/O CHART OF IC8301

Pin No.	I/O	Signal Name	Description
1	I	A15	Memory address 16
2	I	A14	Memory address 15
3	I	A13	Memory address 14
4	I	A12	Memory address 13
5	I	A11	Memory address 12
6	I	A10	Memory address 11
7	I	A9	Memory address 10
8	I	A8	Memory address 9
9	-	NC	(Not used)
10	-	NC	(Not used)
11	I	/WE	Write enable : low
12	I	/RST	Reset : low
13	-	NC	(Not used)
14	-	NC	(Not used)
15	I	RDY/BSY	DVD Ready (Busy : low)
16	I	A18	Memory address 19
17	I	A17	Memory address 18
18	I	A7	Memory address 8
19	I	A6	Memory address 7
20	I	A5	Memory address 6
21	I	A4	Memory address 5
22	I	A3	Memory address 4
23	I	A2	Memory address 3
24	I	A1	Memory address 2
25	I	A0	Memory address 1
26	I	/CE	Memory chip select : low
27	-	VSS	Ground
28	I	/OE	Output enable : low
29	I/O	DQ0	Memory data 0
30	I/O	DQ8	Memory data 8
31	I/O	DQ1	Memory data 1
32	I/O	DQ9	Memory data 9
33	I/O	DQ2	Memory data 2
34	I/O	DQ10	Memory data 10
35	I/O	DQ3	Memory data 3
36	I/O	DQ11	Memory data 11
37	I	VCC	+5.0V
38	I/O	DQ4	Memory data 4
39	I/O	DQ12	Memory data 12
40	I/O	DQ5	Memory data 5
41	I/O	DQ13	Memory data 13
42	I/O	DQ6	Memory data 6
43	I/O	DQ14	Memory data 14
44	I/O	DQ7	Memory data 7
45	I/O	DQ15A-1	Memory address 0
46	-	VSS	Ground
47	-	/BYTE	Ground
48	I	A16	Memory address 16

I/O CHART OF IC8100

Pin No.	I/O	Signal Name	Description
1	I	VDD	+3.6V
2	I/O	DQ0	SDRAM data 7
3	I	VDDQ	+3.6V
4	I/O	DQ1	SDRAM data 6
5	I/O	DQ2	SDRAM data 5
6	-	VSSQ	Ground
7	I/O	DQ3	SDRAM data 4
8	I/O	DQ4	SDRAM data 3
9	I	VDDQ	+3.6V
10	I/O	DQ5	SDRAM data 2
11	I/O	DQ6	SDRAM data 1
12	-	VSSQ	Ground
13	I/O	DQ7	SDRAM data 0
14	I	VDD	+3.6V
15	I	LDQM	Data input/output mask
16	I	/WE	Write enable : low
17	I	/CAS	Column address strobe : low
18	I	/RAS	Row address strobe : low
19	I	/CS	SDRAM chip select : low
20	I	BA0	(Not used)
21	I	BA1	(Not used)
22	I	A10	SDRAM address 10
23	I	A0	SDRAM address 0
24	I	A1	SDRAM address 1
25	I	A2	SDRAM address 2
26	I	A3	SDRAM address 3
27	I	VDD	+3.6V

Pin No.	I/O	Signal Name	Description
28	-	VSS	Ground
29	I	A4	SDRAM address 4
30	I	A5	SDRAM address 5
31	I	A6	SDRAM address 6
32	I	A7	SDRAM address 7
33	I	A8	SDRAM address 8
34	I	A9	SDRAM address 9
35	I	A11	SDRAM address 11
36	-	NC	(Not used)
37	-	CKE	(Not used)
38	I	CLK	SDRAM clock
39	I	UDQM	Data input/output mask
40	-	NC	(Not used)
41	-	VSS	Ground
42	I/O	DQ8	SDRAM data 8
43	I	VDDQ	+3.6V
44	I/O	DQ9	SDRAM data 9
45	I/O	DQ10	SDRAM data 10
46	-	VSSQ	Ground
47	I/O	DQ11	SDRAM data 11
48	I/O	DQ12	SDRAM data 12
49	I	VDDQ	+3.6V
50	I/O	DQ13	SDRAM data 13
51	I/O	DQ14	SDRAM data 14
52	-	VSSQ	Ground
53	I/O	DQ15	SDRAM data 15
54	-	VSS	Ground

DVD DECODER III SCHEMATIC DIAGRAM

NOTE:
PARTS ENCLOSED IN DASHED LINES MARKED "PT" ARE NOT USED.

NOTE:
FOR SCHEMATIC DIAGRAM AND CIRCUIT BOARD LAYOUT NOTES, REFER TO BEGINNING OF SCHEMATIC SECTION.

NOTE: For placing a purchase order of the parts,
be sure to use the part number listed in the parts list.
Do not use the part number on this diagram.

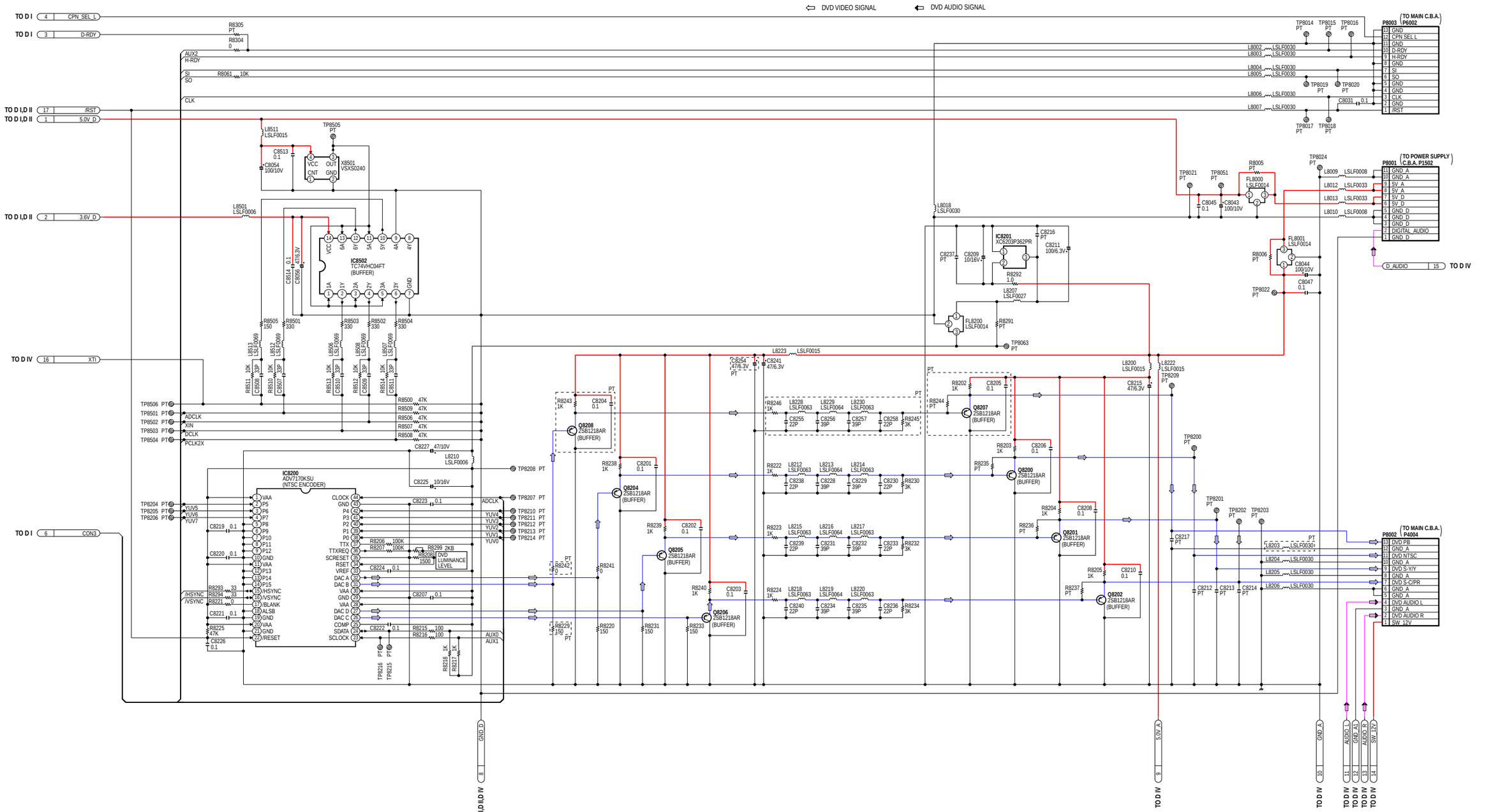

LINK TO VOLTAGE CHART

LSJB2007
AG-527DVDE
DVD DECODER III SCHEMATIC DIAGRAM

IC8200 NTSC ENCODER IC-DETAIL BLOCK DIAGRAM

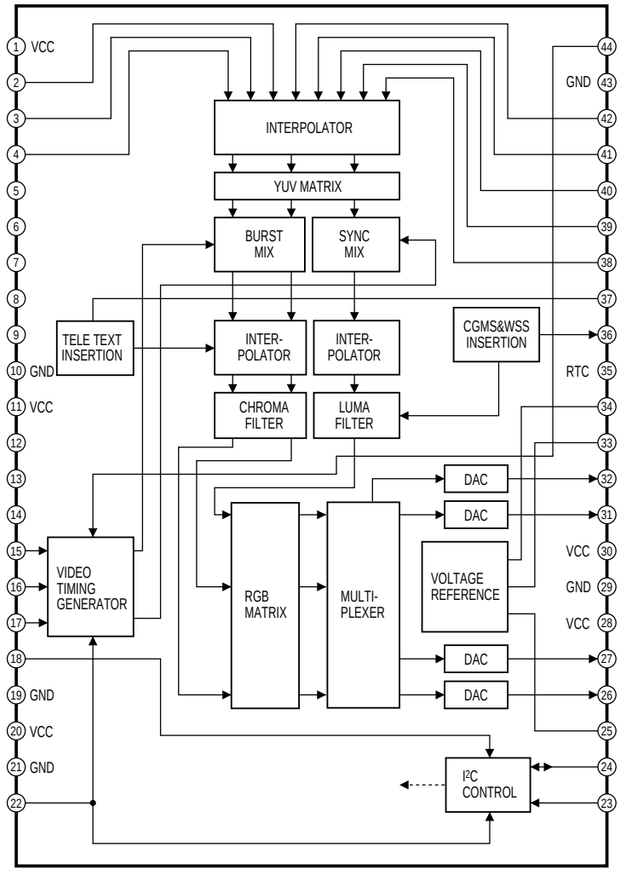

IC8502 BUFFER IC-DETAIL BLOCK DIAGRAM

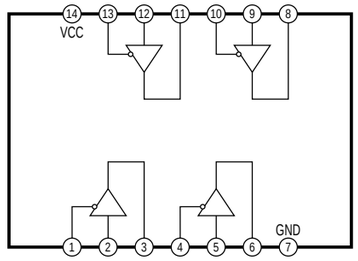

AG-527DVDE
IC8200, 8502 DETAIL BLOCK DIAGRAM

DVD DECODER IV SCHEMATIC DIAGRAM

NOTE:
PARTS ENCLOSED IN DASHED LINES MARKED "PT" ARE NOT USED.

NOTE:
FOR SCHEMATIC DIAGRAM AND CIRCUIT BOARD LAYOUT NOTES, REFER TO BEGINNING OF SCHEMATIC SECTION.

NOTE: For placing a purchase order of the parts, be sure to use the part number listed in the parts list. Do not use the part number on this diagram.

I/O CHART OF IC8403

Pin No.	I/O	Signal Name	Description
1	I	XTI	27MHz clock
2	O	SCKO	System clock
3	I	VCP	+5.0V
4	-	NC	(Not used)
5	-	MCKO	(Not used)
6	I	ML	Mode control latch
7	I	MC	Mode control clock
8	I	MD	Mode control data
9	I	RSTB	Audio DAC reset : low
10	-	ZERO	(Not used)
11	O	V OUT R	Audio R-CH
12	-	GNDA	Ground
13	I	VCA	+5.0V
14	O	V OUT L	Audio L-CH
15	-	CAP	Audio common
16	I	BCKIN	Audio bit clock
17	I	DIN	Audio serial data
18	I	LRCIN	Audio left/right clock
19	-	NC	(Not used)
20	-	RSV	(Not used)
21	I	VDD	+5.0V
22	-	GNDD	Ground
23	-	GNDP	Ground
24	-	XTO	(Not used)

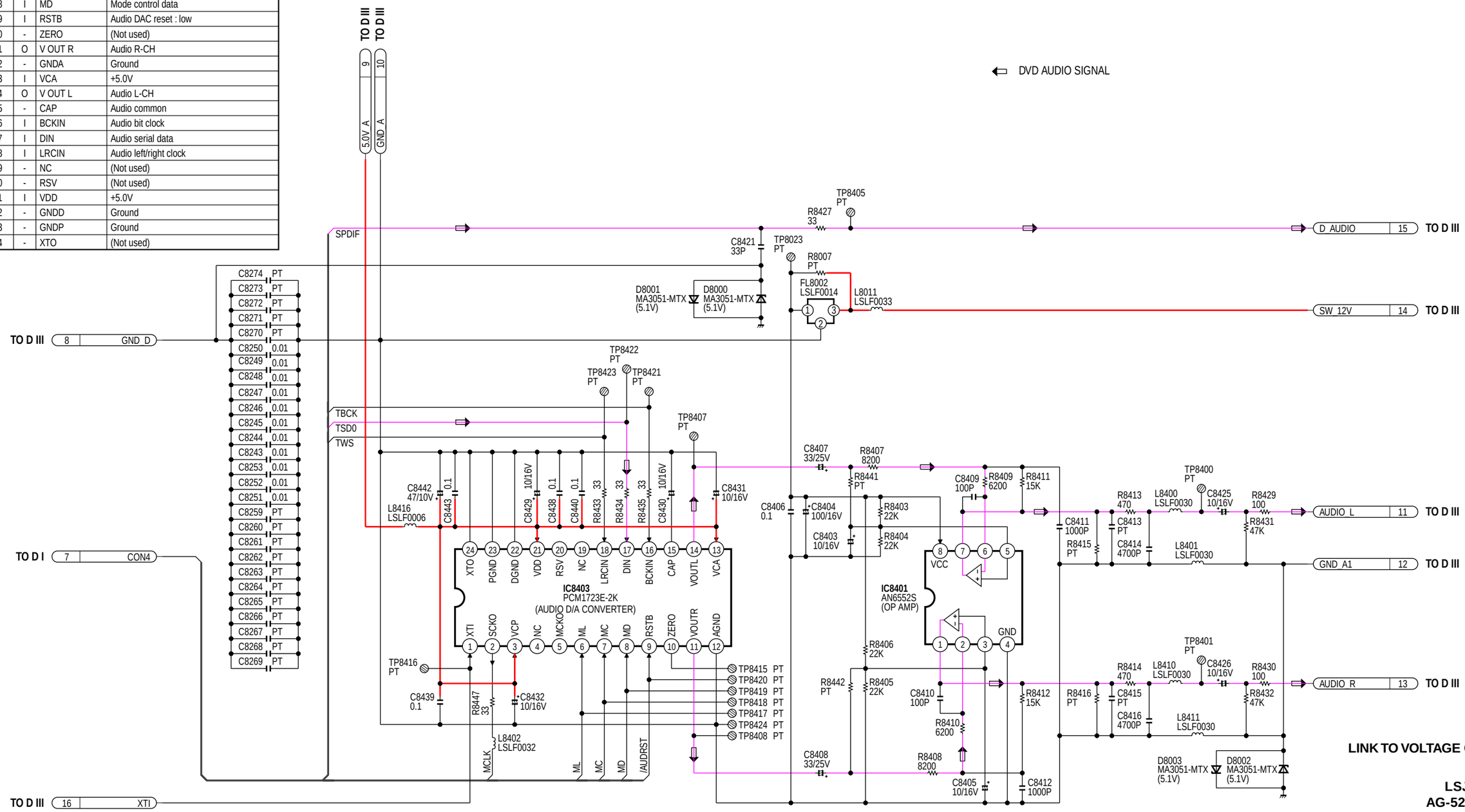

LSJB2007
AG-527DVDE
DVD DECODER IV SCHEMATIC DIAGRAM

INTERCONNECTION SCHEMATIC DIAGRAM

NOTE:
PARTS ENCLOSED IN DASHED LINES MARKED "PT" ARE NOT USED.

NOTE:
FOR SCHEMATIC DIAGRAM AND CIRCUIT BOARD LAYOUT NOTES, REFER TO BEGINNING OF SCHEMATIC SECTION.

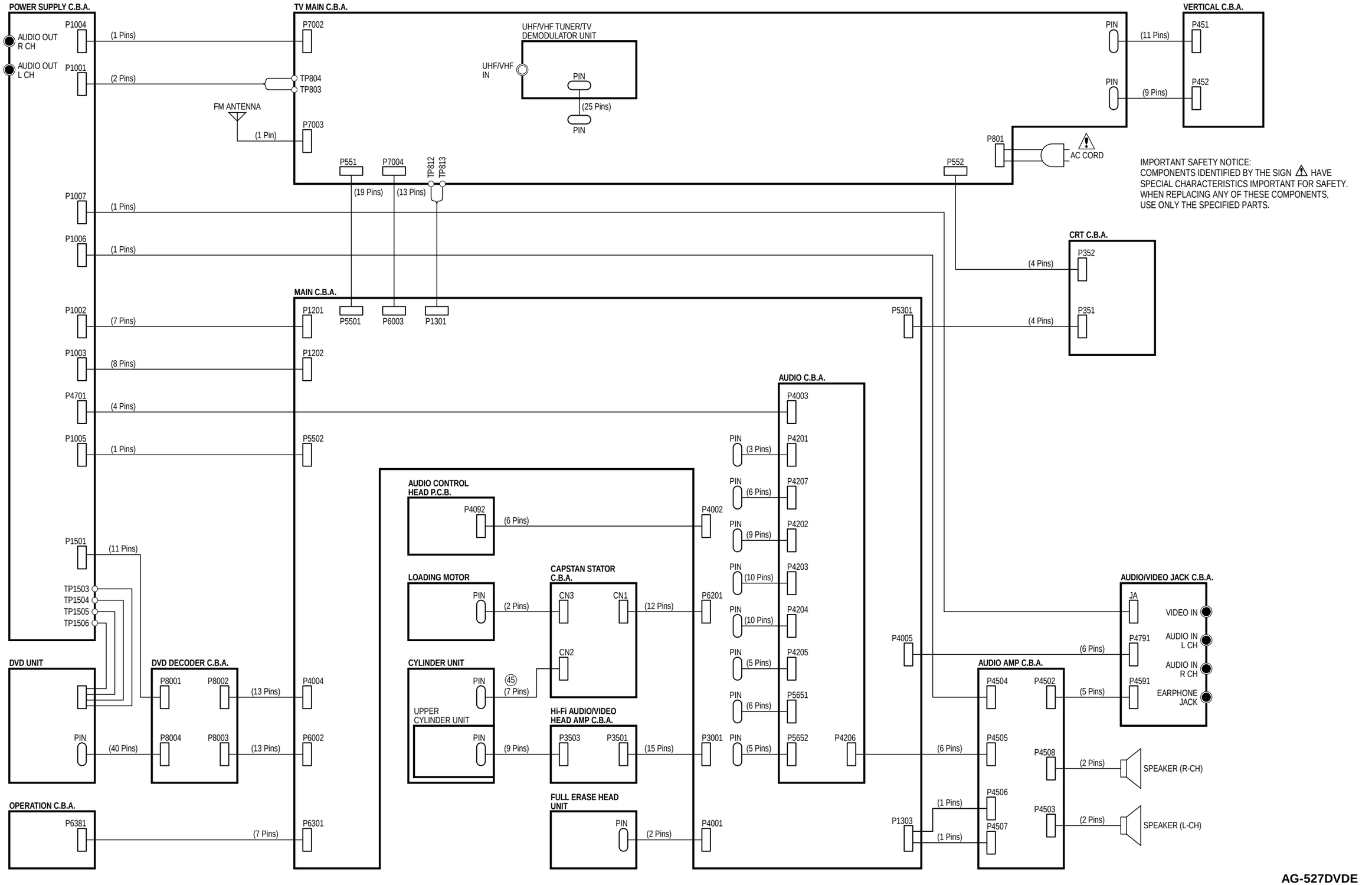

AG-527DVDE
INTERCONNECTION SCHEMATIC DIAGRAM

8.2. MAIN SCHEMATIC DIAGRAMS

MAIN I (SYSTEM CONTROL/ SERVO) SCHEMATIC DIAGRAM

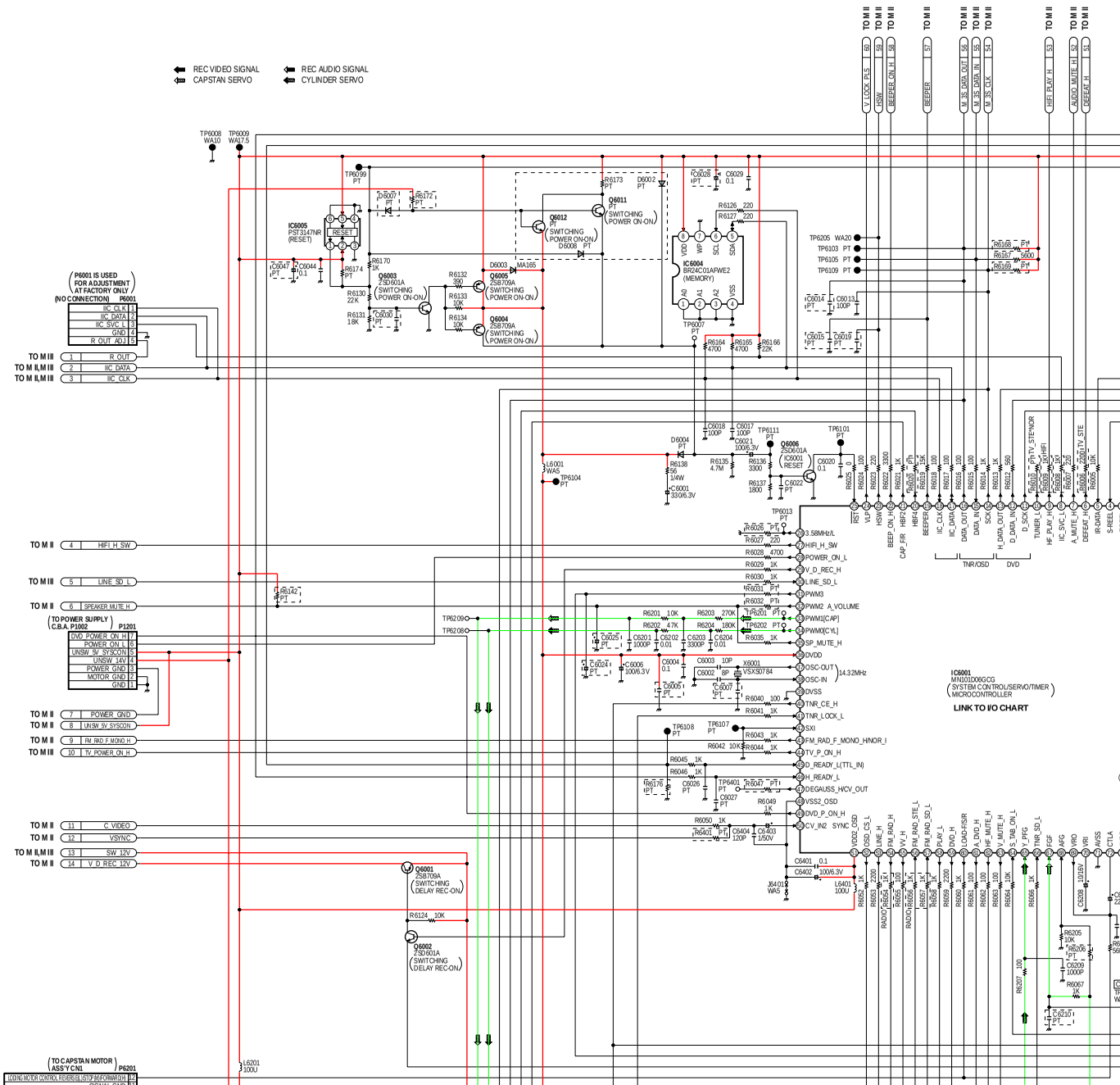

8.2. MAIN SCHEMATIC DIAGRAMS

MAIN I (SYSTEM CONTROL/ SERVO) SCHEMATIC DIAGRAM

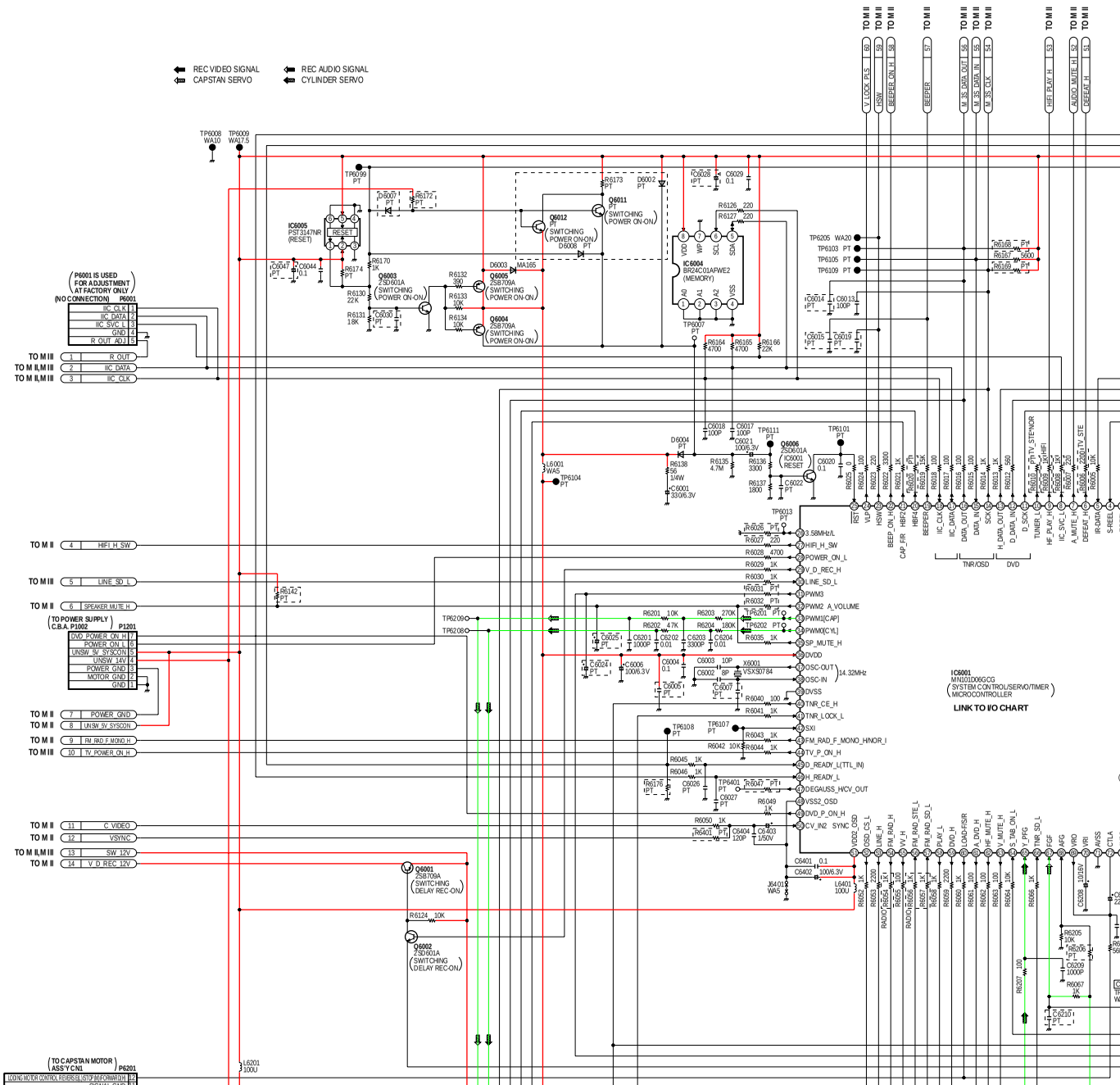

MAIN II (SIGNAL PROCESS/AUDIO) SCHEMATIC DIAGRAM

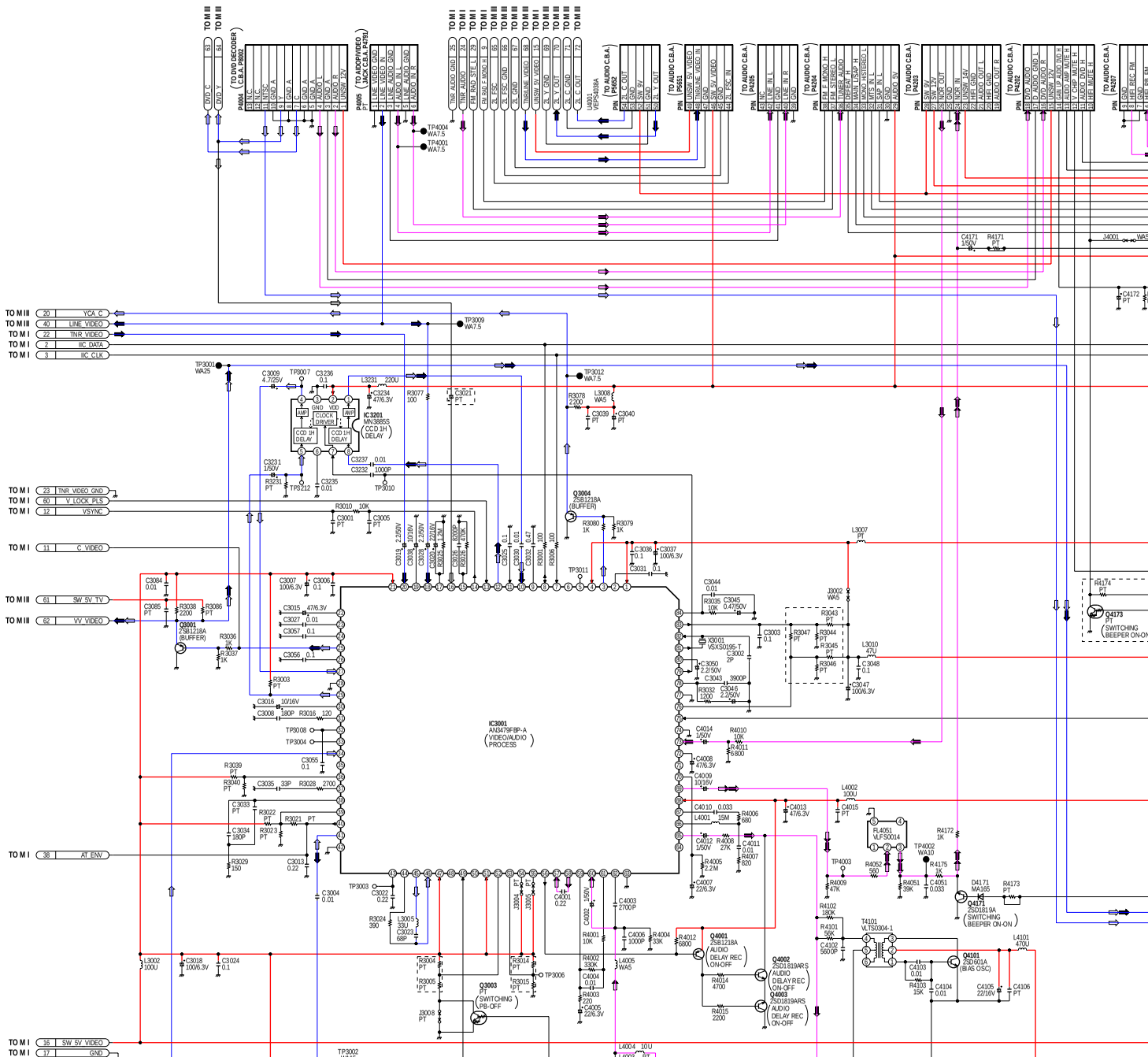

MAIN II (SIGNAL PROCESS/AUDIO) SCHEMATIC DIAGRAM

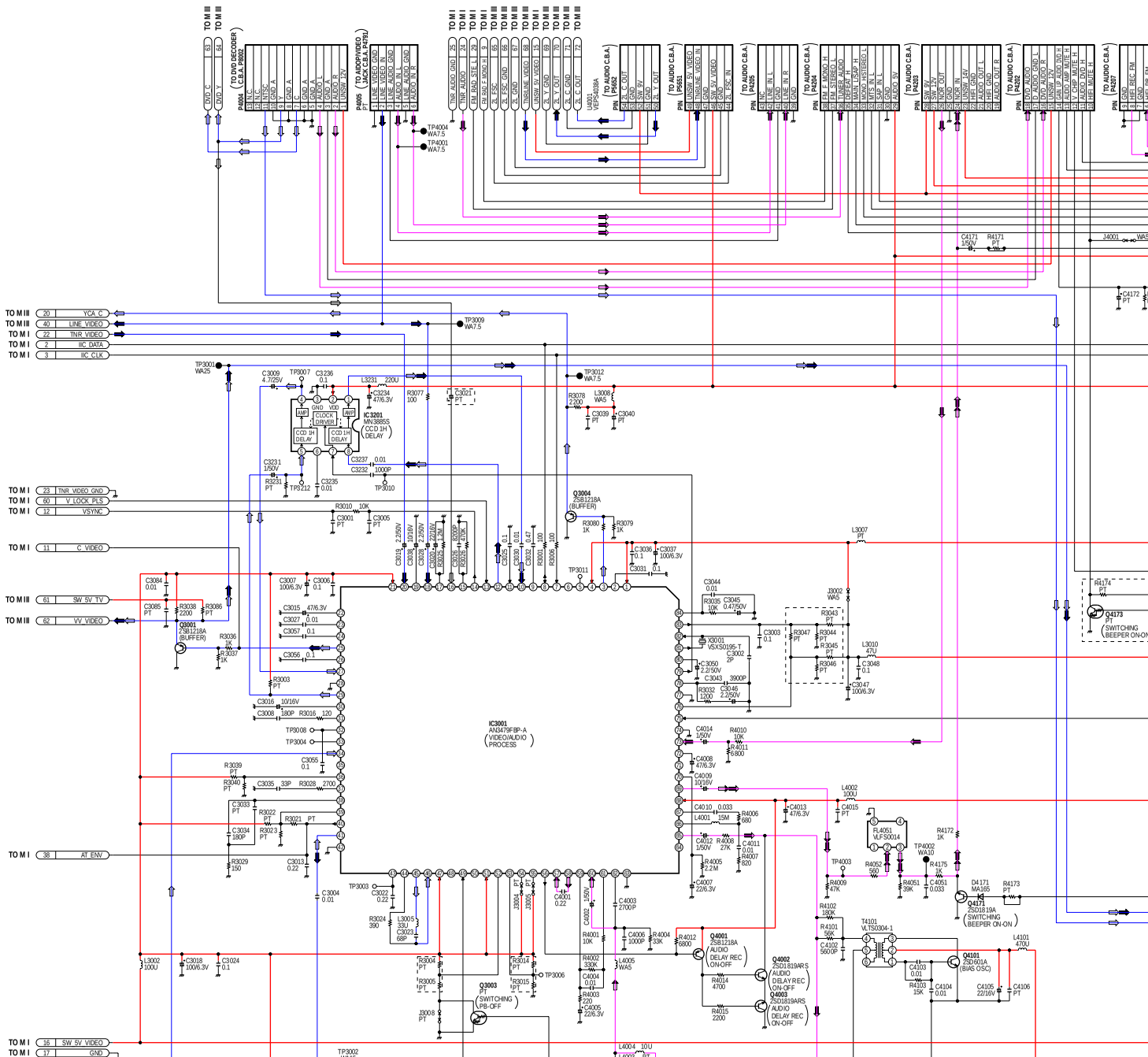

MAIN III (TV Y/C PROCESS) SCHEMATIC DIAGRAM

IMPORTANT SAFETY NOTICE:
COMPONENTS IDENTIFIED BY THE SIGN ⚠ HAV
SPECIAL CHARACTERISTICS IMPORTANT FOR SA
WHEN REPLACING ANY OF THESE COMPONENTS
USE ONLY THE SPECIFIED PARTS.

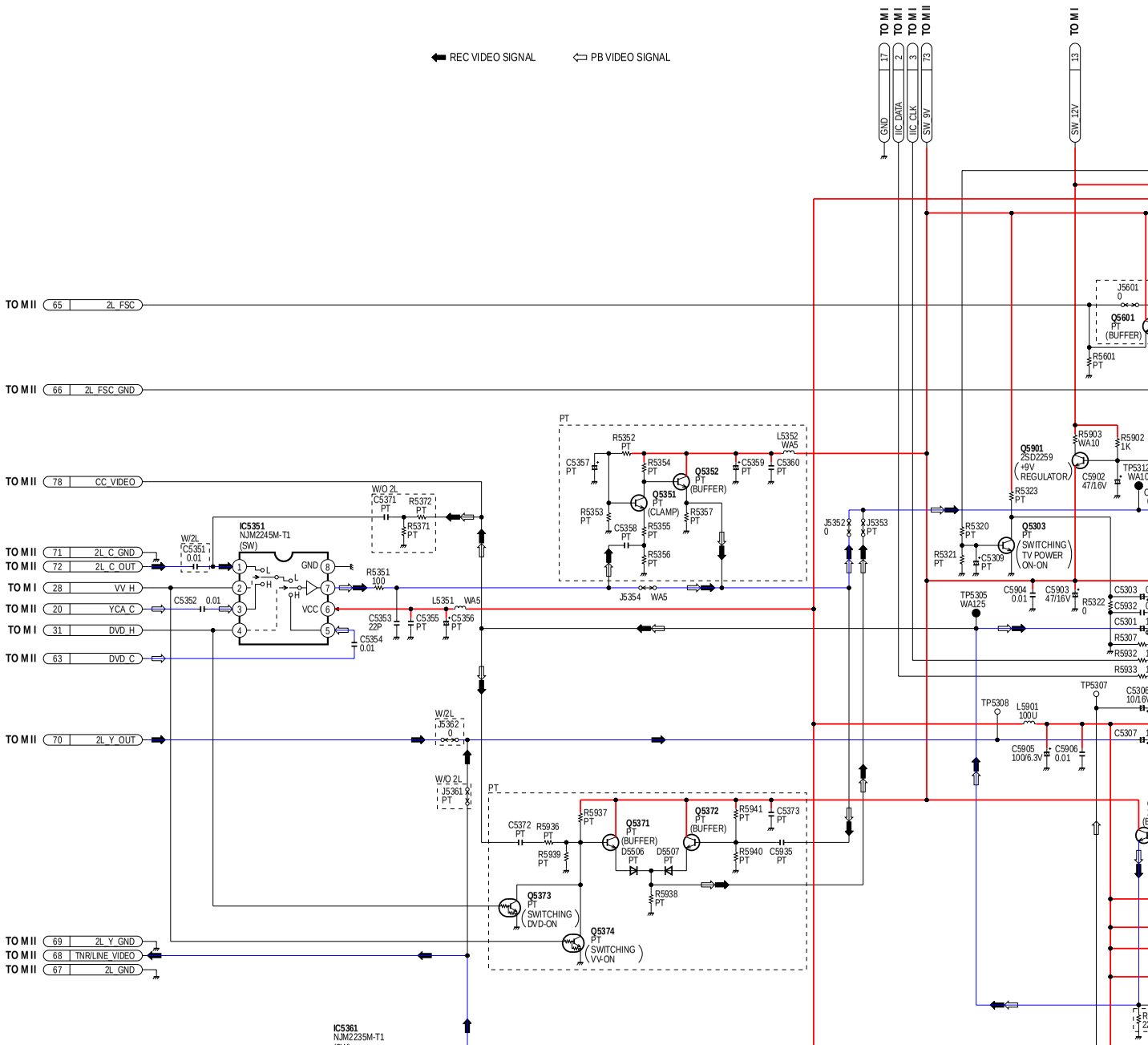

MAIN III (TV Y/C PROCESS) SCHEMATIC DIAGRAM

IMPORTANT SAFETY NOTICE:
COMPONENTS IDENTIFIED BY THE SIGN ⚠ HAV
SPECIAL CHARACTERISTICS IMPORTANT FOR SA
WHEN REPLACING ANY OF THESE COMPONENTS
USE ONLY THE SPECIFIED PARTS.

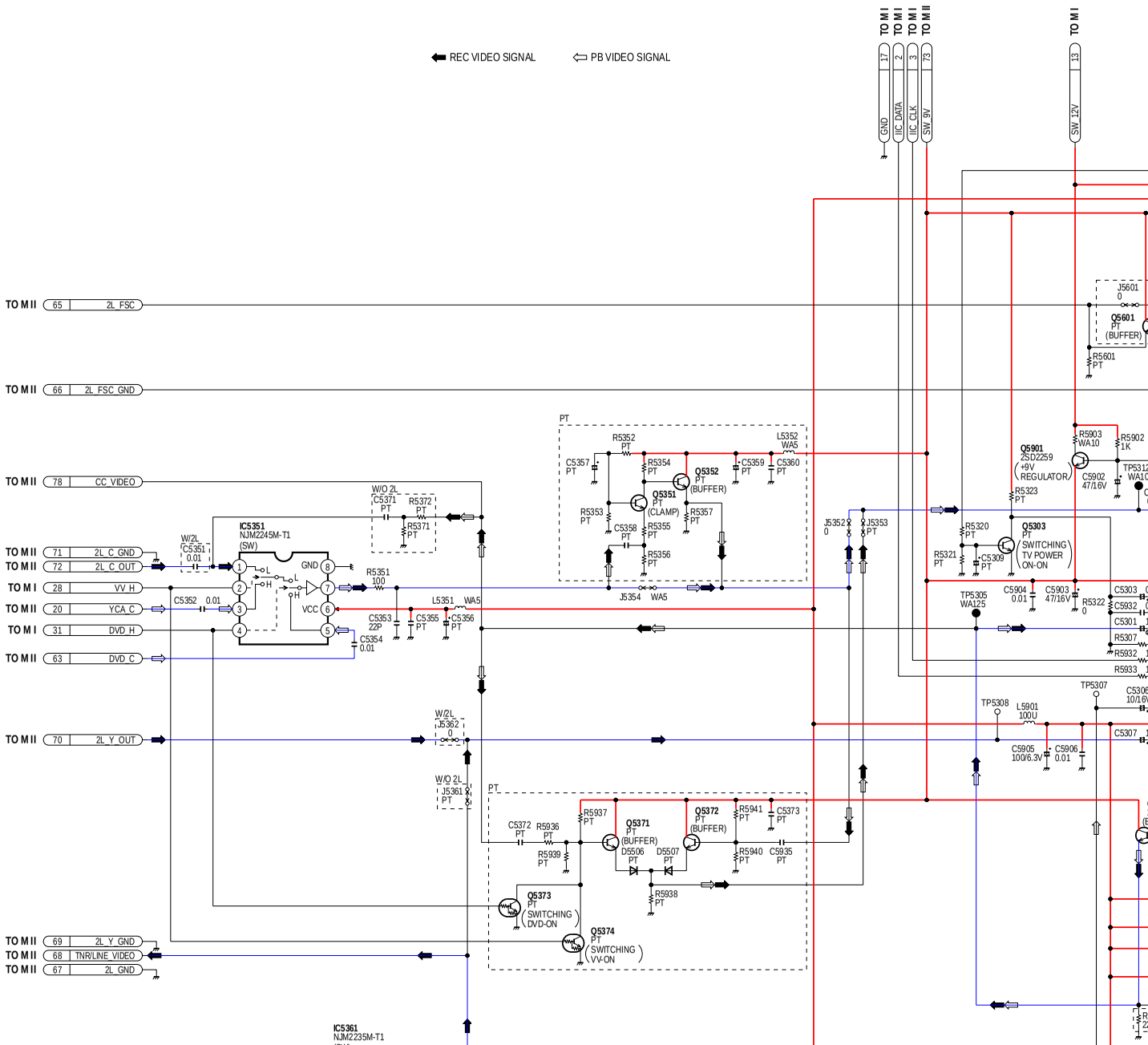

MAIN IV (POWER SUPPLY) SCHEMATIC DIAGRAM

CAUTION: FOR CONTINUED PROTECTION AGAINST FIRE HAZARD,
REPLACE ONLY WITH THE SAME TYPE 1.6A 125/250V FUSE.
ATTENTION: POUR UNE PROTECTION CONTINUE LES RISQUES
D'T INCENDIE N'I UTILISERQUE DES FUSIBLE DE MÉME
TYPE 1.6A 125/250V

IMPORTANT SAFETY NOTICE:
COMPONENTS IDENTIFIED BY THE SIGN ⚠ HAVE
SPECIAL CHARACTERISTICS IMPORTANT FOR SAFETY.
WHEN REPLACING ANY OF THESE COMPONENTS,
USE ONLY THE SPECIFIED PARTS.

HOT CIRCUIT. BE CAREFUL AND USE AN ISOLATION TRANSFORMER WHEN SERVICING.

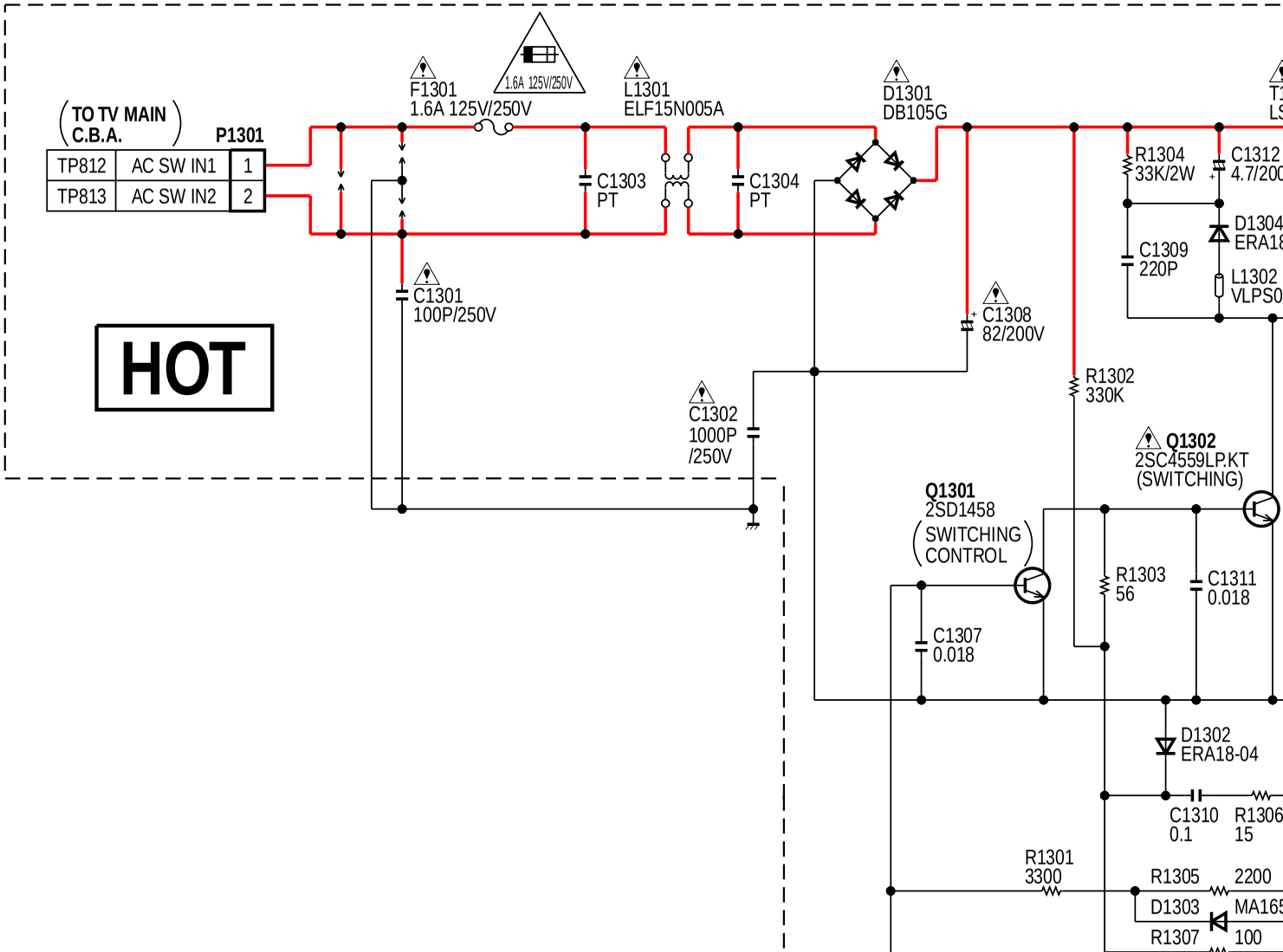

MAIN IV (POWER SUPPLY) SCHEMATIC DIAGRAM

CAUTION: FOR CONTINUED PROTECTION AGAINST FIRE HAZARD, REPLACE ONLY WITH THE SAME TYPE 1.6A 125/250V FUSE.
ATTENTION: POUR UNE PROTECTION CONTINUE LES RISQUES D'T INCENDIE N'I UTILISERQUE DES FUSIBLE DE MÉME TYPE 1.6A 125/250V

IMPORTANT SAFETY NOTICE:
COMPONENTS IDENTIFIED BY THE SIGN ⚠ HAVE SPECIAL CHARACTERISTICS IMPORTANT FOR SAFETY. WHEN REPLACING ANY OF THESE COMPONENTS, USE ONLY THE SPECIFIED PARTS.

HOT CIRCUIT. BE CAREFUL AND USE AN ISOLATION TRANSFORMER WHEN SERVICING.

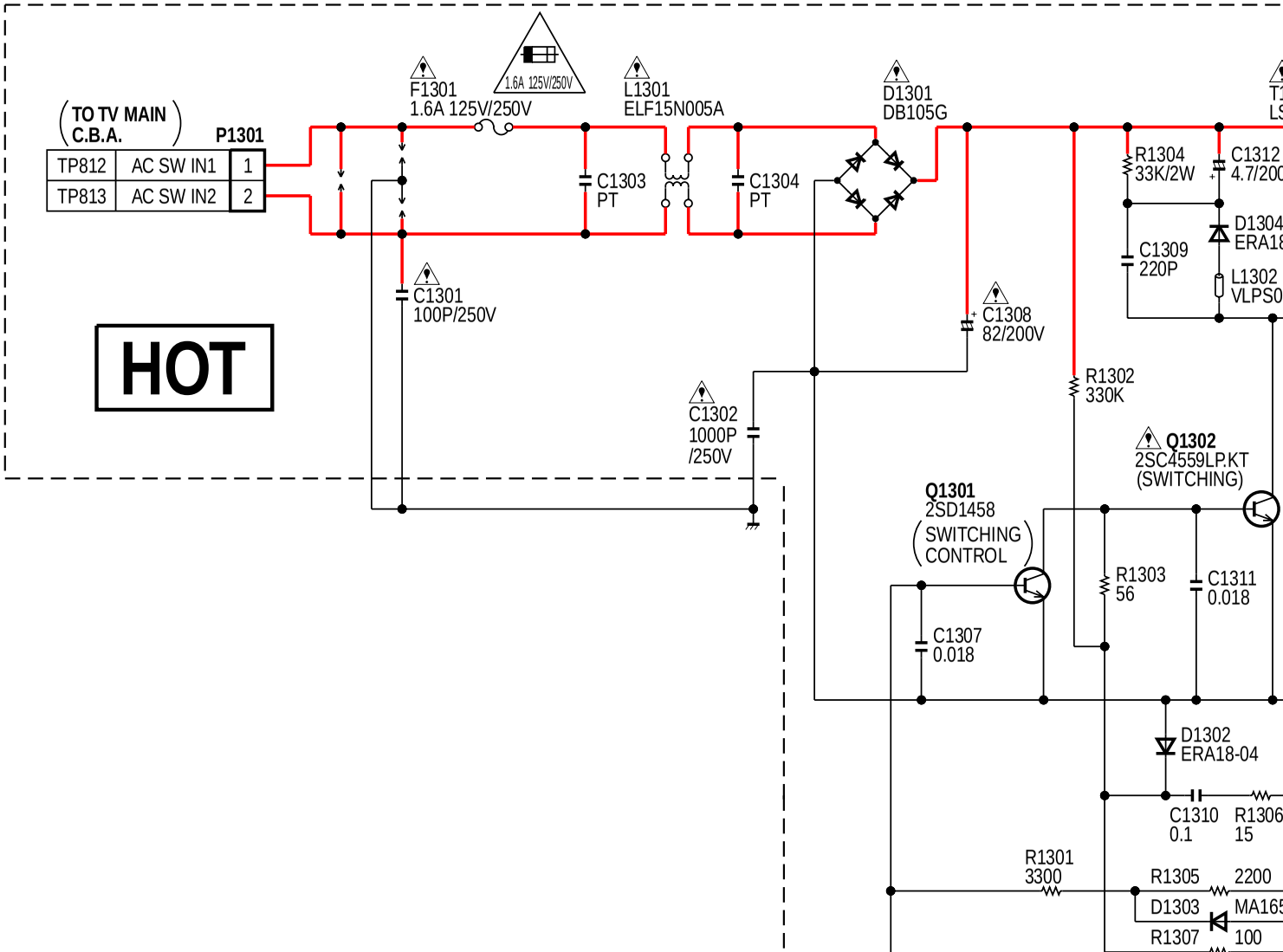

8.3. AUDIO SCHEMATIC DIAGRAMS

AUDIO I SCHEMATIC DIAGRAM

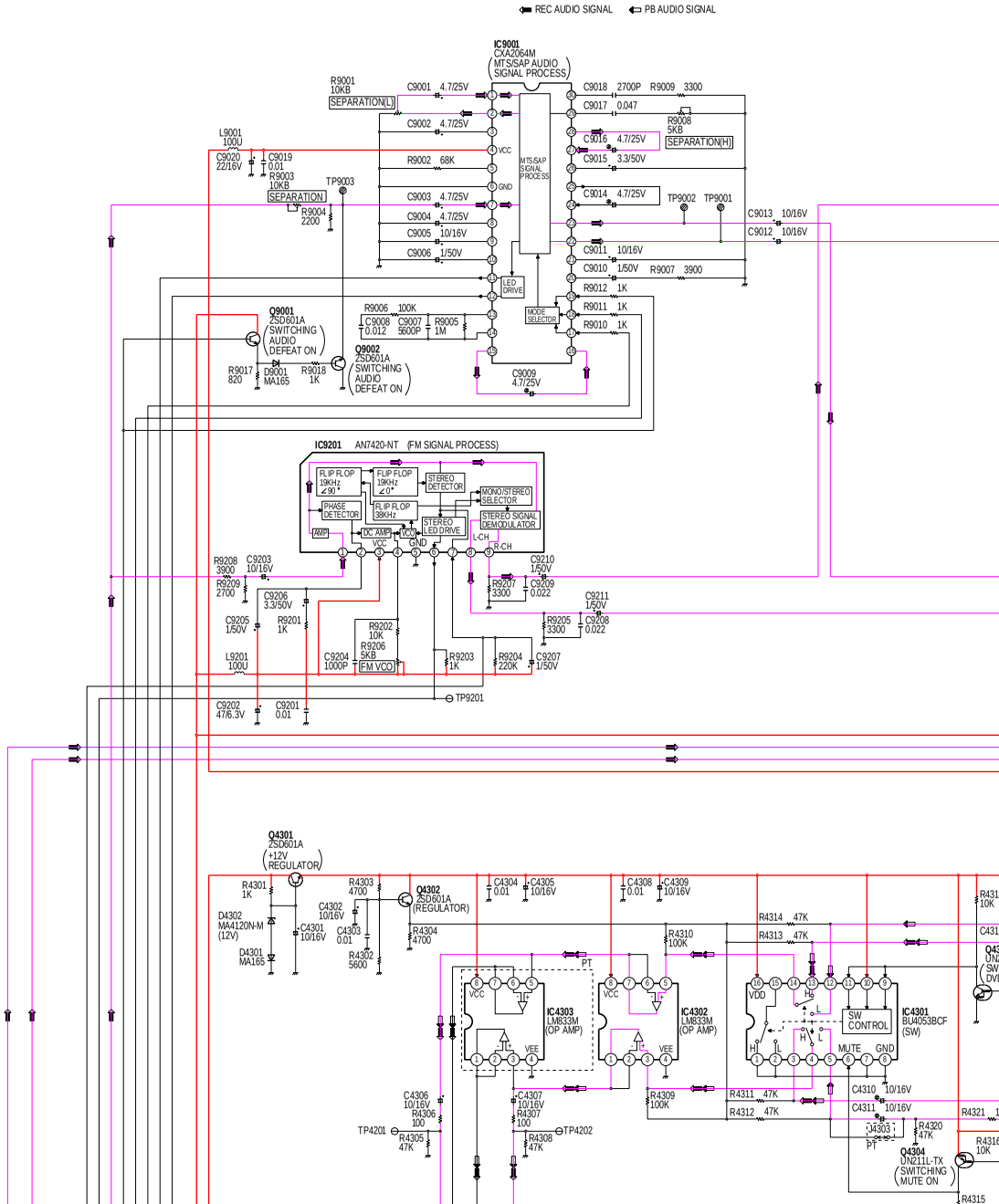

8.3. AUDIO SCHEMATIC DIAGRAMS

AUDIO I SCHEMATIC DIAGRAM

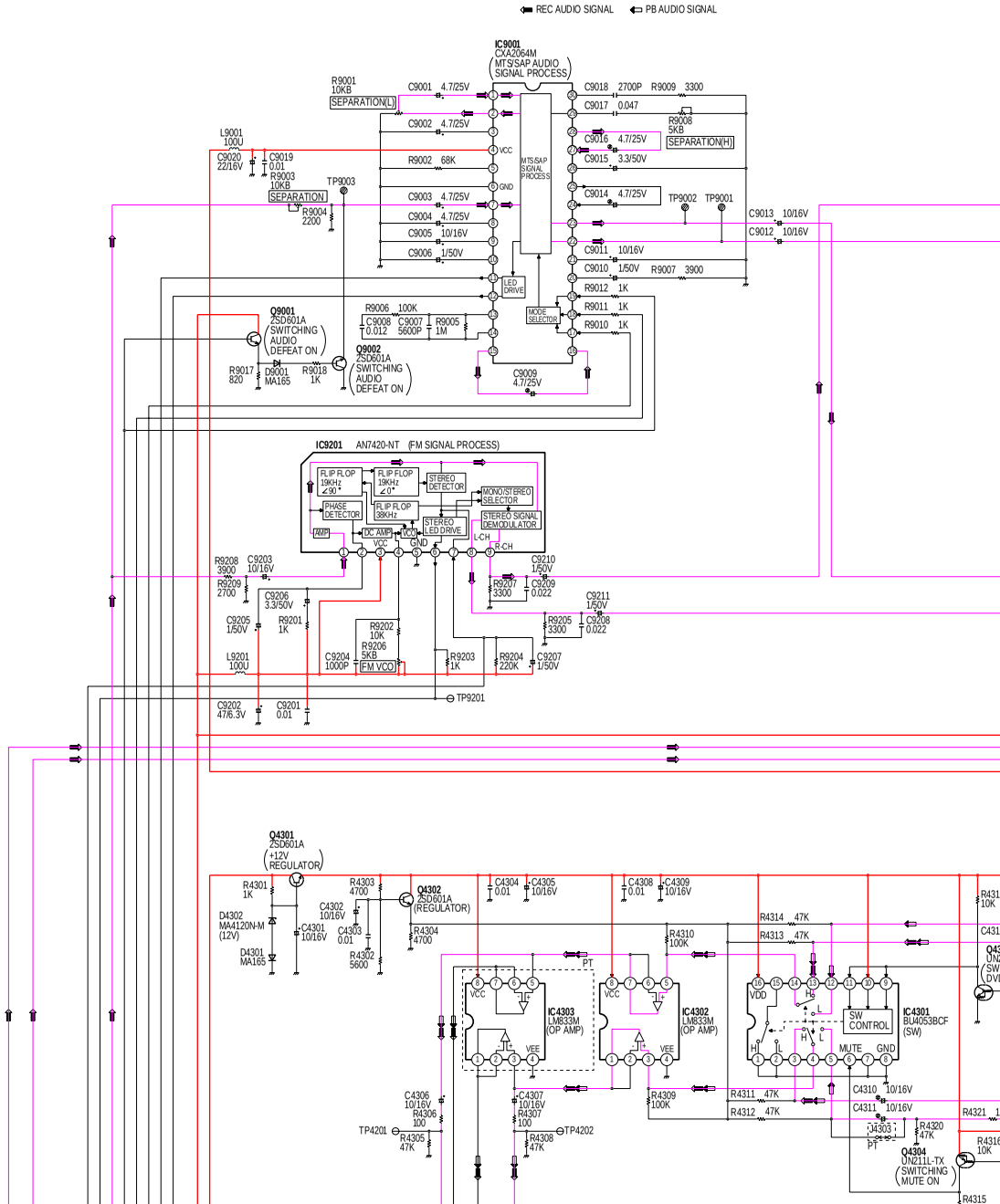

AUDIO II SCHEMATIC DIAGRAM

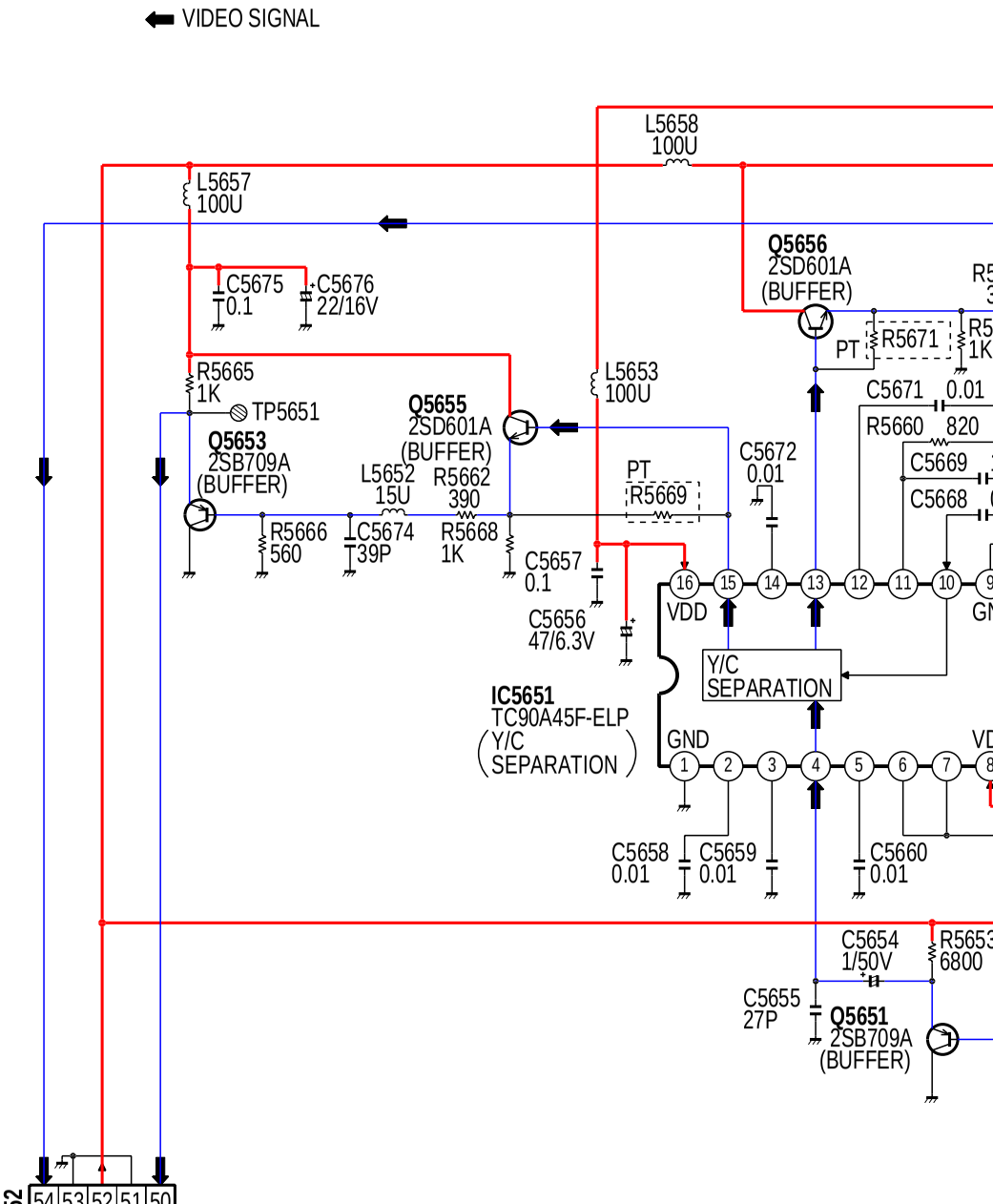

AUDIO II SCHEMATIC DIAGRAM

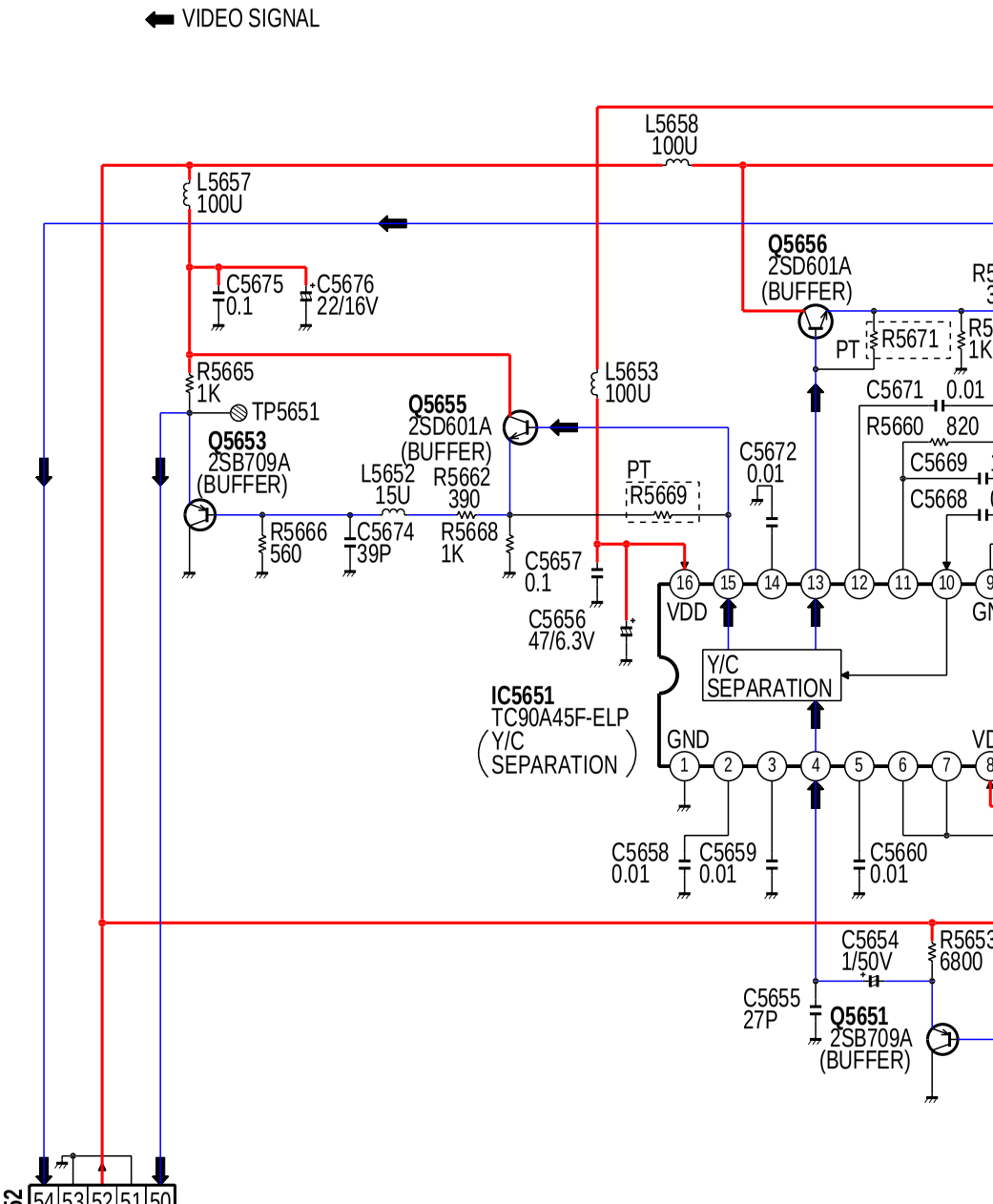

8.4. AUDIO AMP SCHEMATIC DIAGRAM

AUDIO AMP SCHEMATIC DIAGRAM

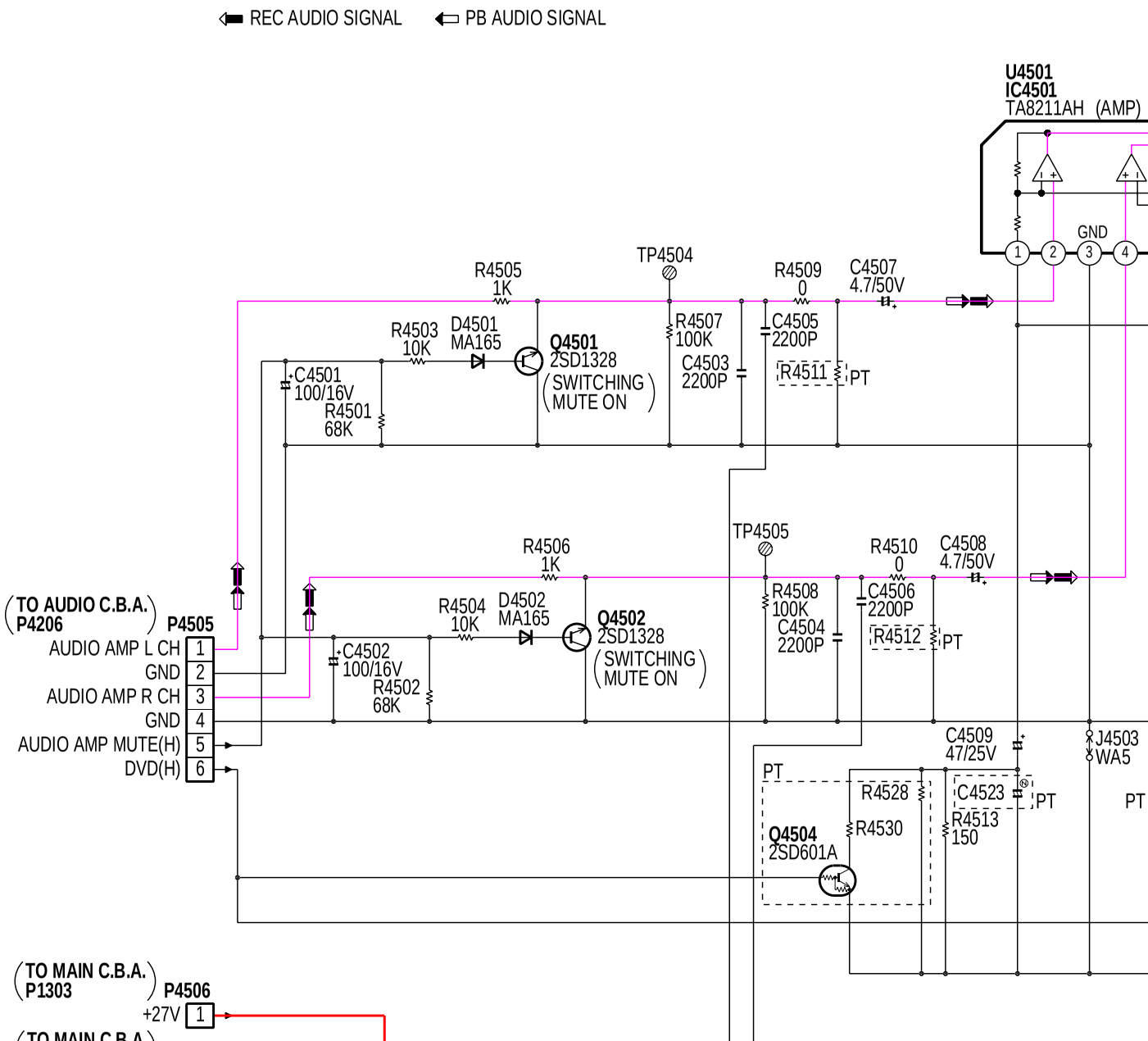

8.4. AUDIO AMP SCHEMATIC DIAGRAM

AUDIO AMP SCHEMATIC DIAGRAM

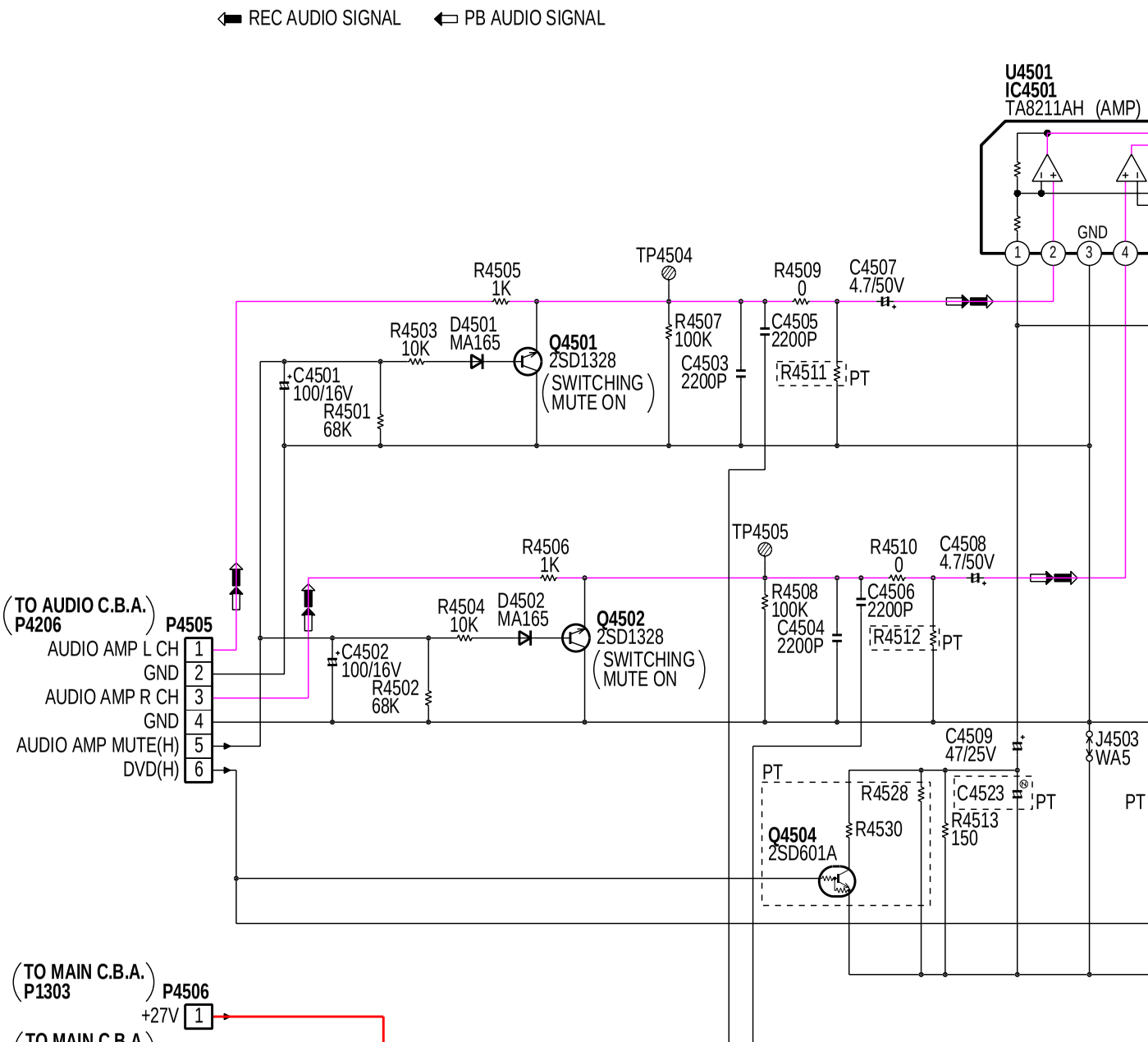

8.5. POWER SUPPLY SCHEMATIC DIAGRAM

POWER SUPPLY SCHEMATIC DIAGRAM

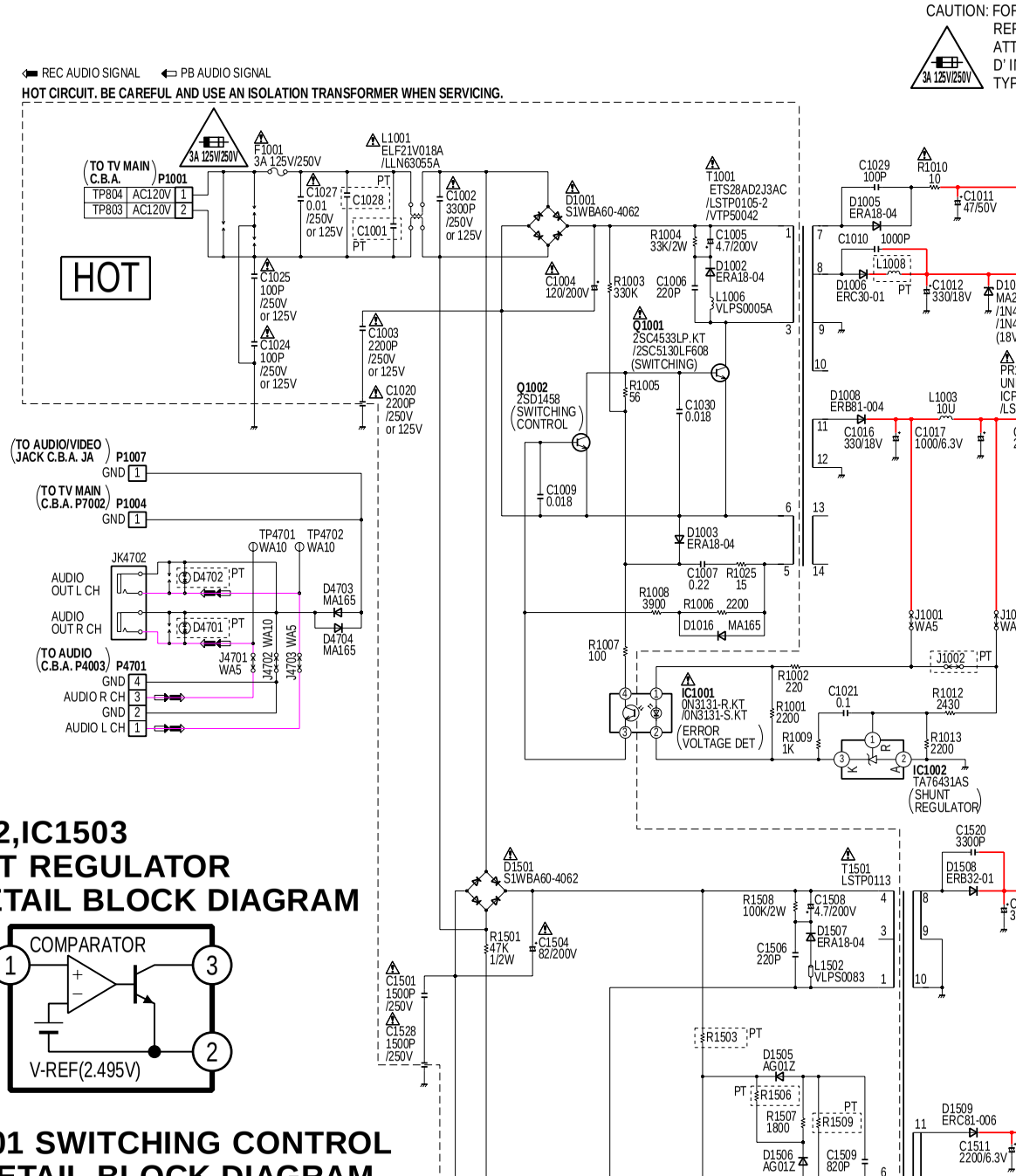

IC1002,IC1503 SHUNT REGULATOR IC- DETAIL BLOCK DIAGRAM

IC1501 SWITCHING CONTROL IC- DETAIL BLOCK DIAGRAM

8.5. POWER SUPPLY SCHEMATIC DIAGRAM

POWER SUPPLY SCHEMATIC DIAGRAM

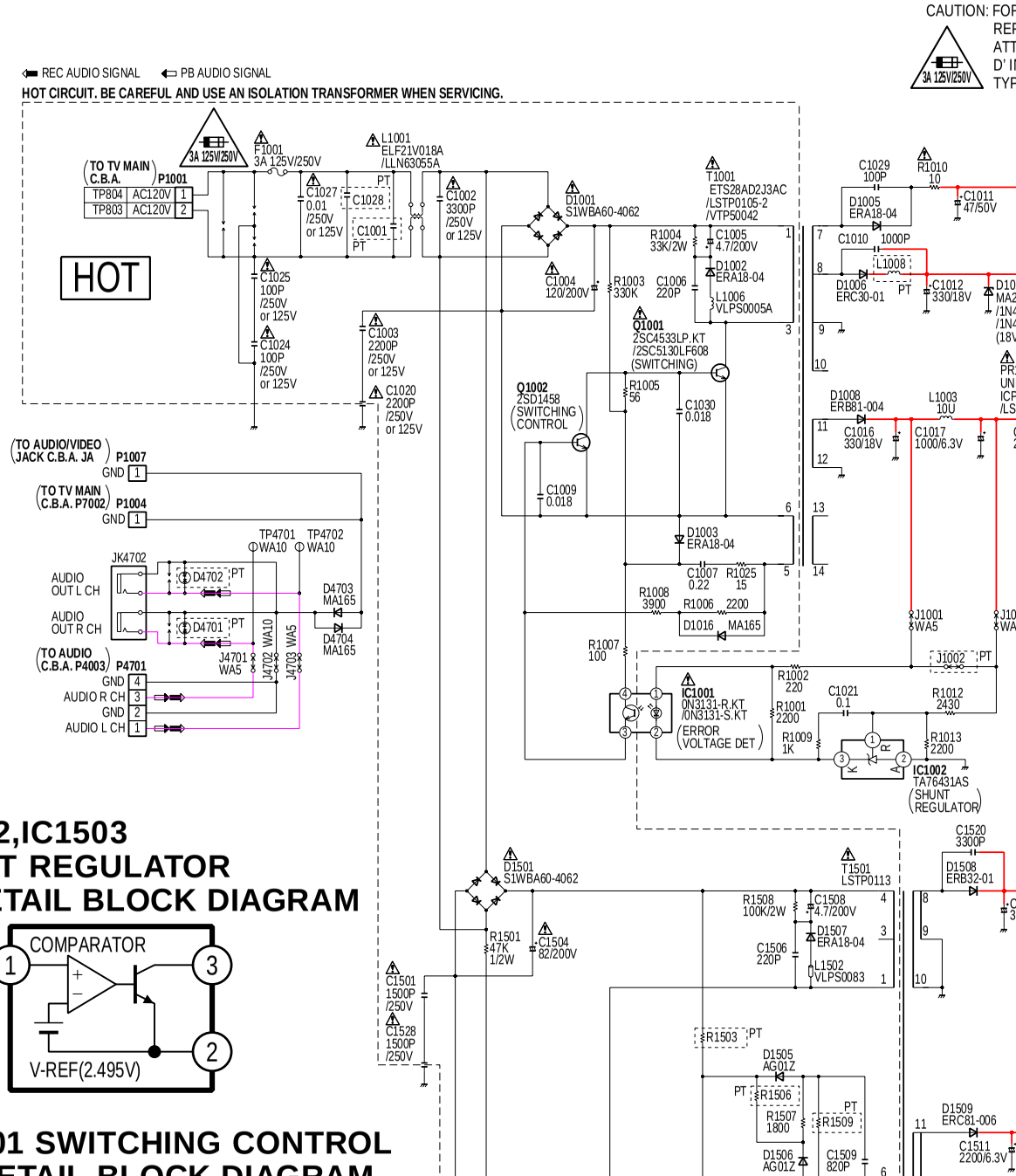

IC1002,IC1503 SHUNT REGULATOR IC- DETAIL BLOCK DIAGRAM

IC1501 SWITCHING CONTROL IC- DETAIL BLOCK DIAGRAM

8.6. TV MAIN SCHEMATIC DIAGRAMS

TV MAIN SCHEMATIC DIAGRAM

CAUTION: FOR CONTINUED PROTECTION A
REPLACE ONLY WITH THE SAME
ATTENTION: POUR UNE PROTEC
D' INCENDIE N' UTILISERQUE DE
TYPE 4A 125/250V

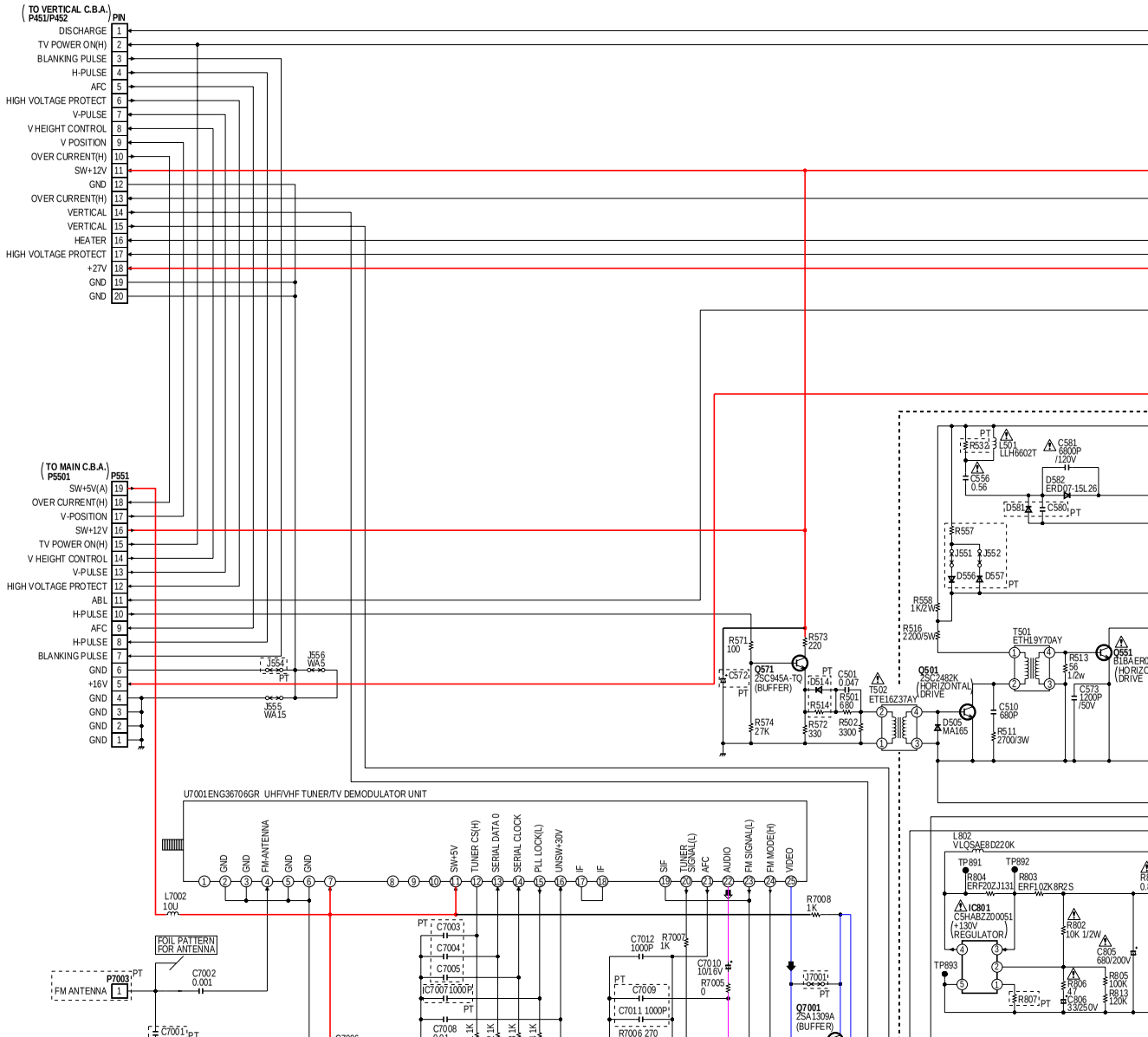

8.6. TV MAIN SCHEMATIC DIAGRAMS

TV MAIN SCHEMATIC DIAGRAM

CAUTION: FOR CONTINUED PROTECTION A
REPLACE ONLY WITH THE SAME
ATTENTION: POUR UNE PROTEC
D' INCENDIE N' UTILISERQUE DE
TYPE 4A 125/250V

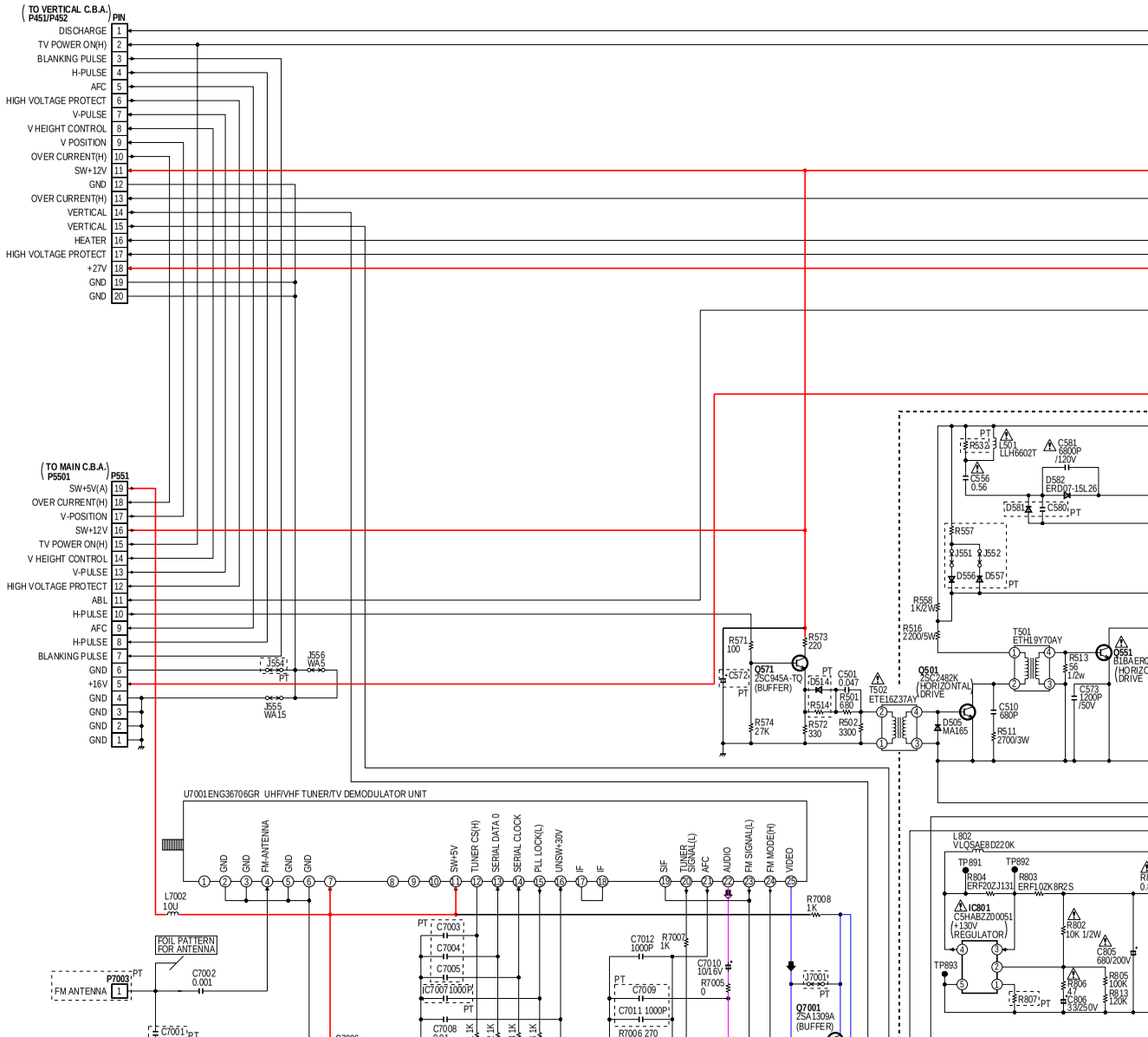

8.7. CRT SCHEMATIC DIAGRAM

CRT SCHEMATIC DIAGRAM

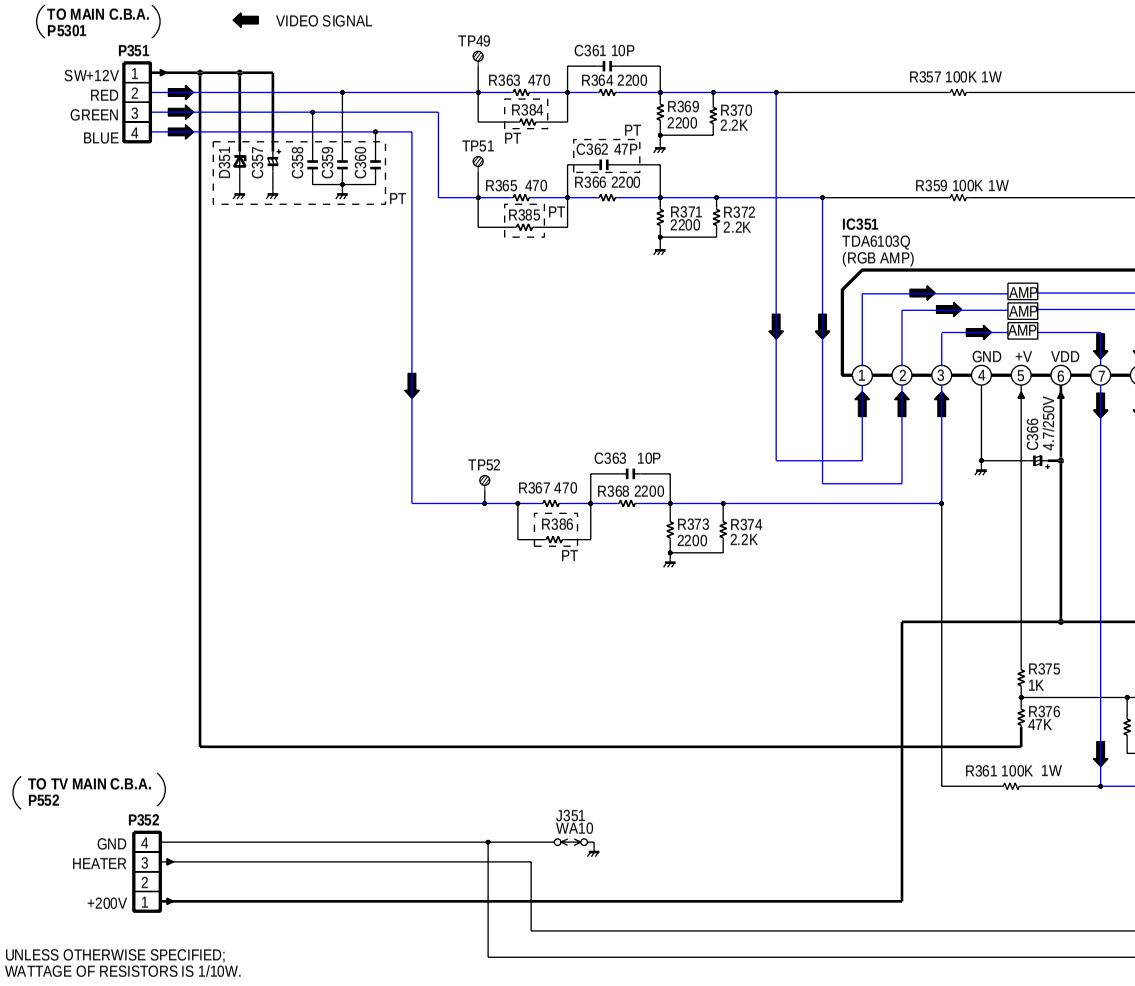

8.7. CRT SCHEMATIC DIAGRAM

CRT SCHEMATIC DIAGRAM

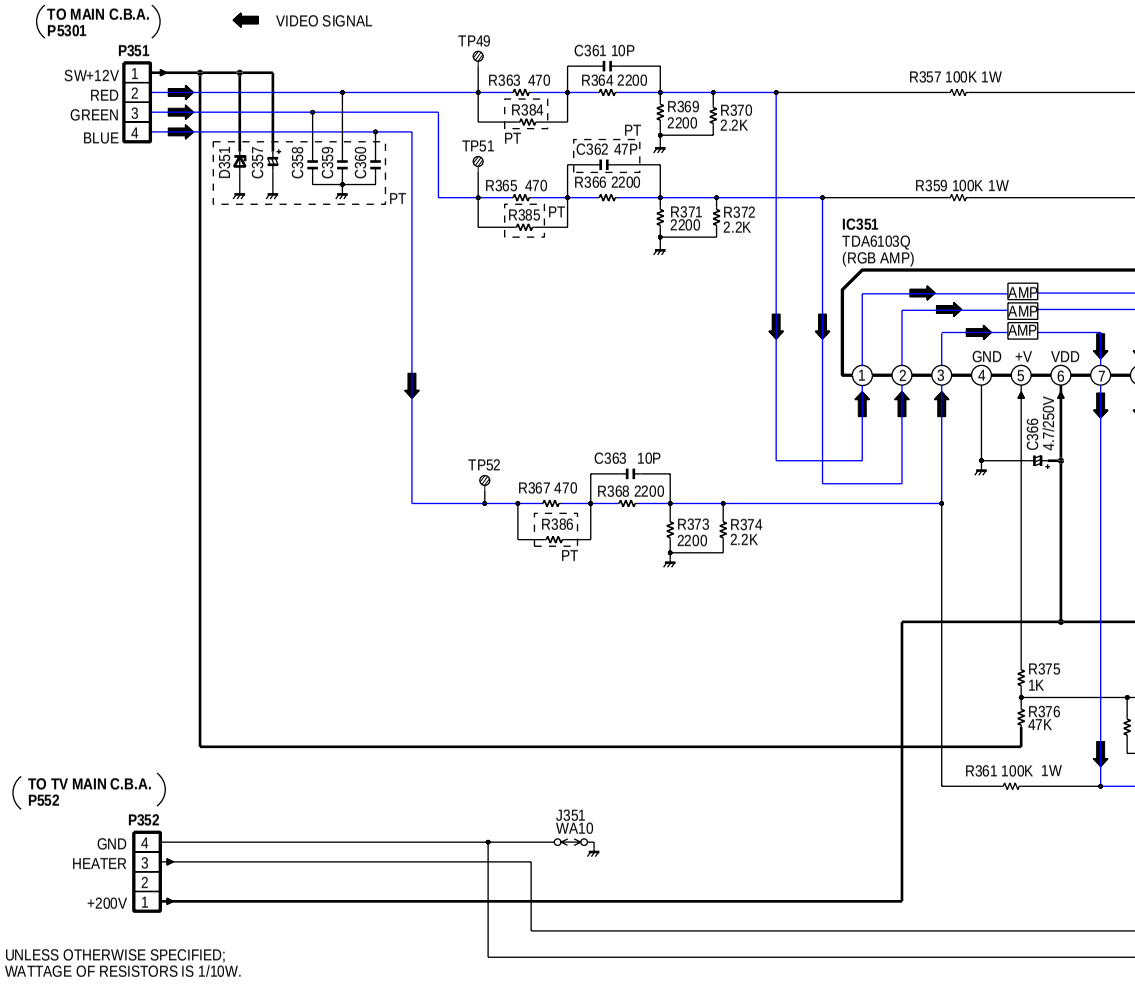

8.8. VERTICAL SCHEMATIC DIAGRAM

VERTICAL SCHEMATIC DIAGRAM

IMPORTANT SAFETY NOTICE:
COMPONENTS IDENTIFIED BY THE SIGN ⚠ HAV
SPECIAL CHARACTERISTICS IMPORTANT FOR SA
WHEN REPLACING ANY OF THESE COMPONENTS
USE ONLY THE SPECIFIED PARTS.

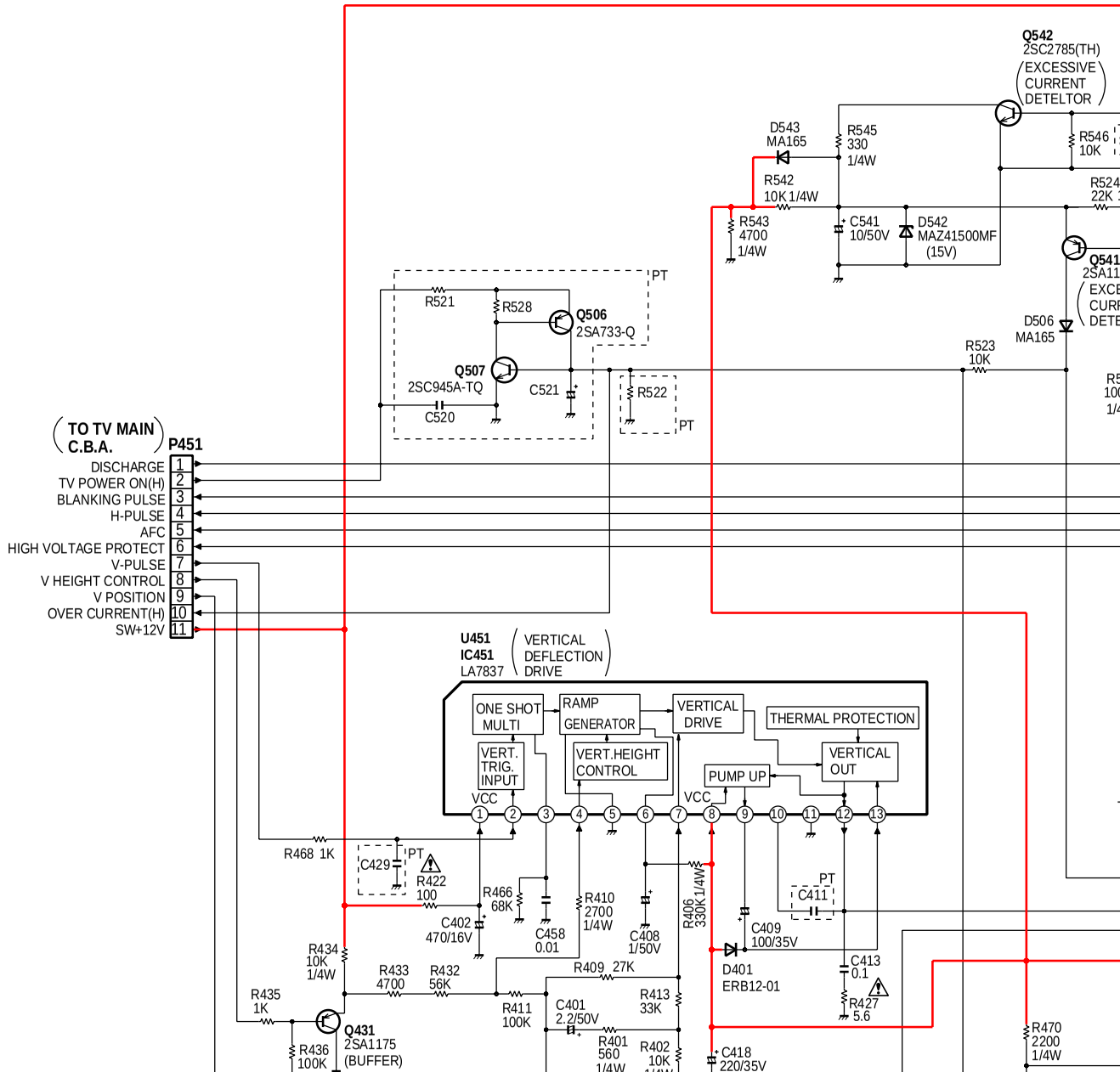

8.8. VERTICAL SCHEMATIC DIAGRAM

VERTICAL SCHEMATIC DIAGRAM

IMPORTANT SAFETY NOTICE:
COMPONENTS IDENTIFIED BY THE SIGN ⚠ HAV
SPECIAL CHARACTERISTICS IMPORTANT FOR SA
WHEN REPLACING ANY OF THESE COMPONENTS
USE ONLY THE SPECIFIED PARTS.

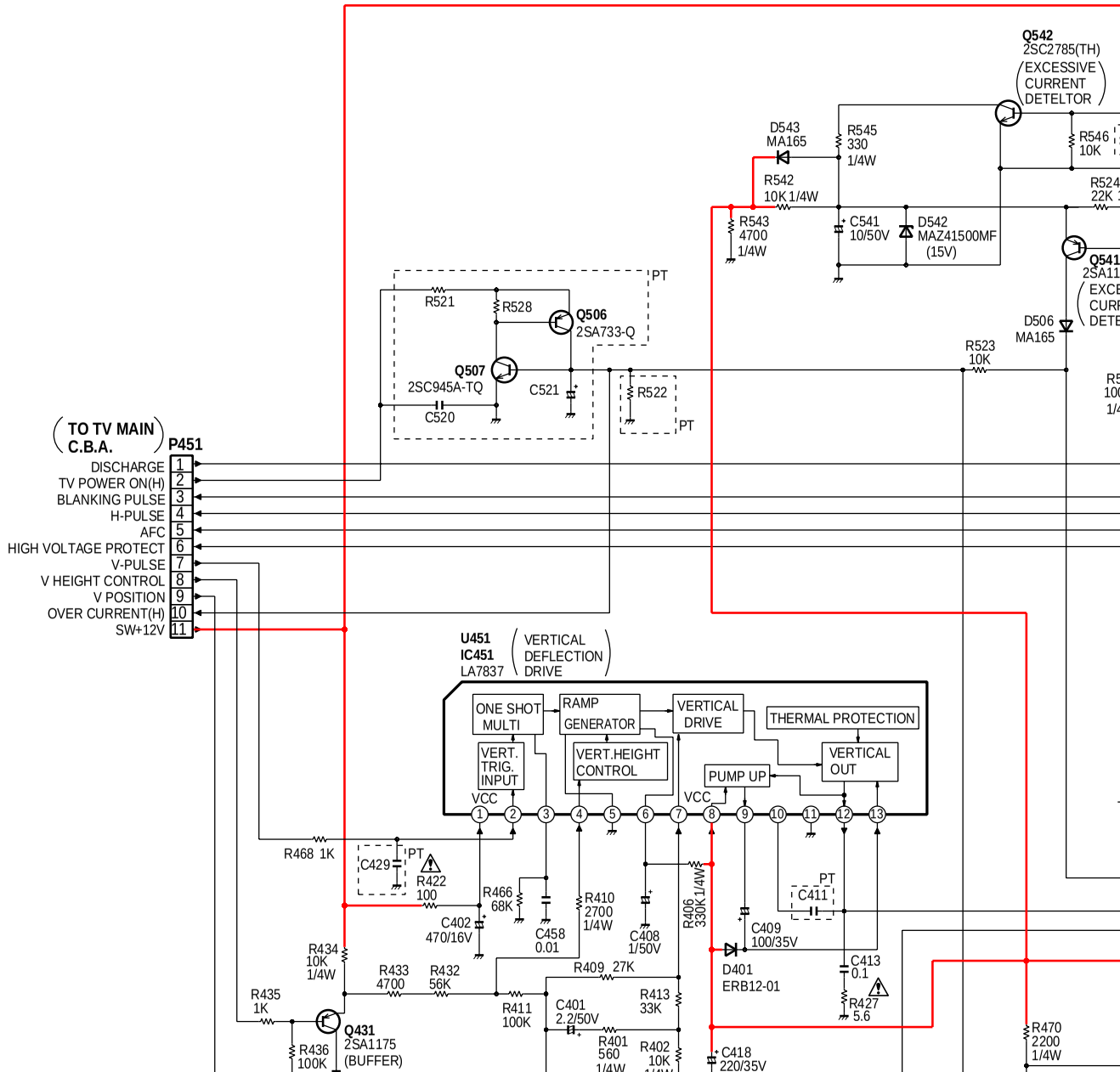

8.9. OPERATION SCHEMATIC DIAGRAM

OPERATION SCHEMATIC DIAGRAM

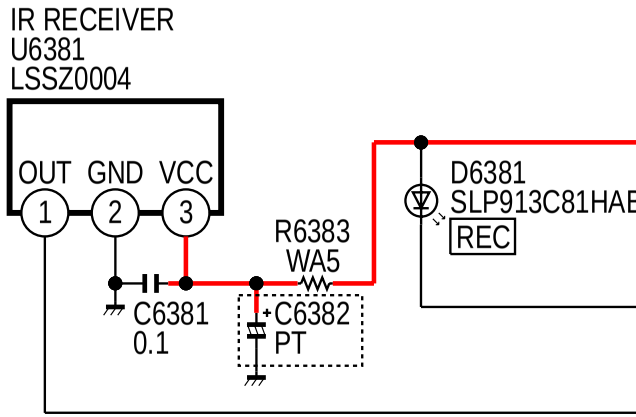

8.9. OPERATION SCHEMATIC DIAGRAM

OPERATION SCHEMATIC DIAGRAM

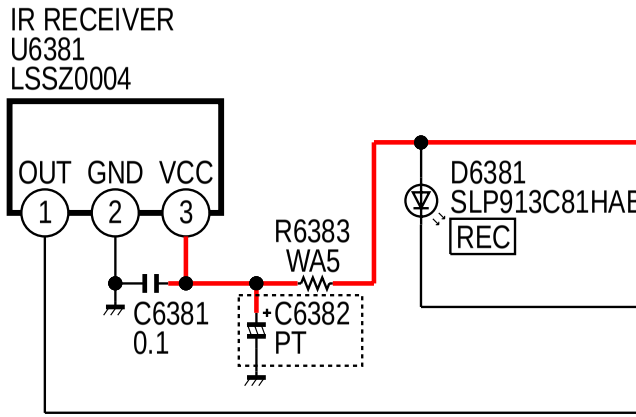

8.10. AUDIO/VIDEO JACK SCHEMATIC DIAGRAM

AUDIO / VIDEO JACK SCHEMATIC DIAGRAM

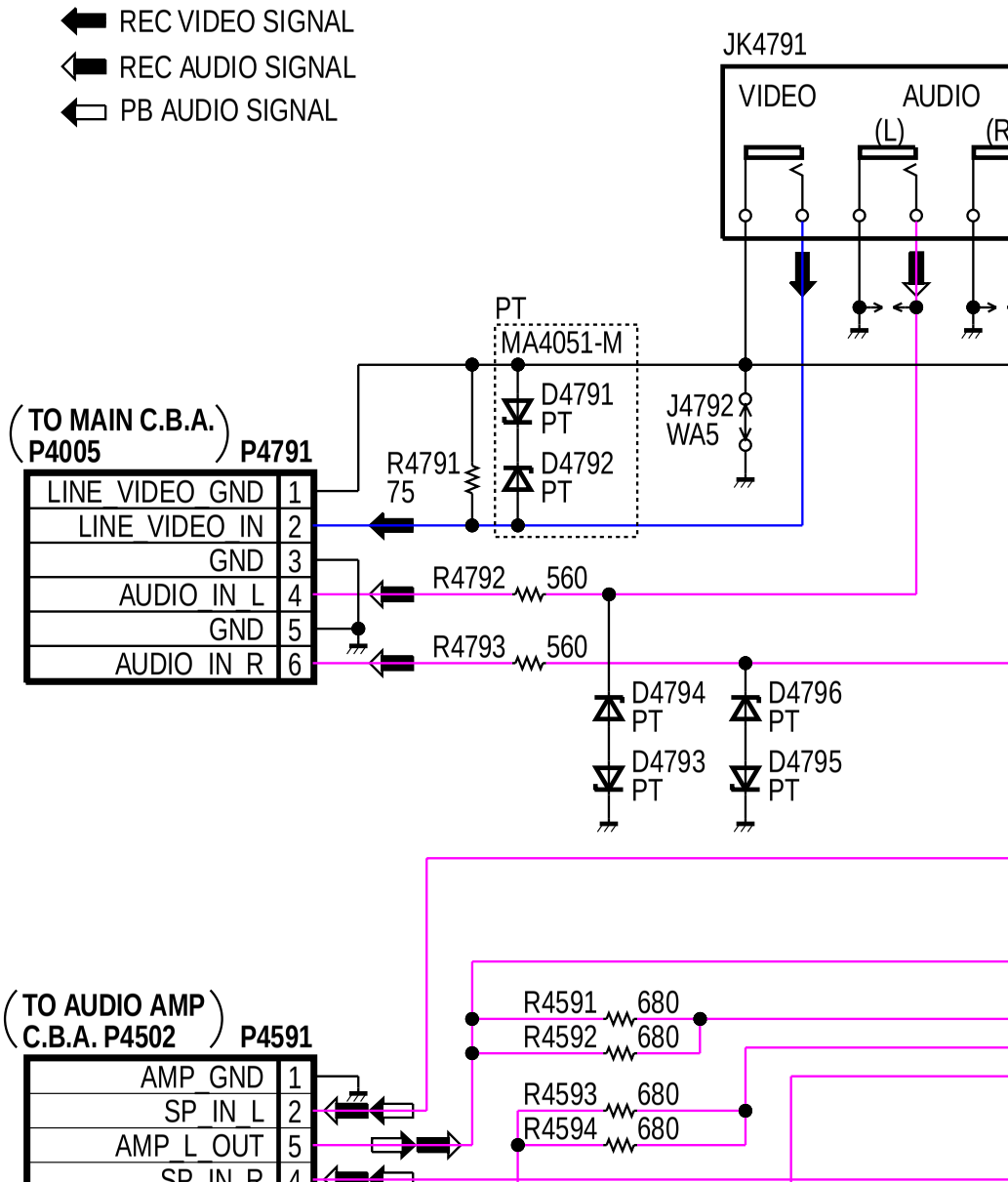

8.10. AUDIO/VIDEO JACK SCHEMATIC DIAGRAM

AUDIO / VIDEO JACK SCHEMATIC DIAGRAM

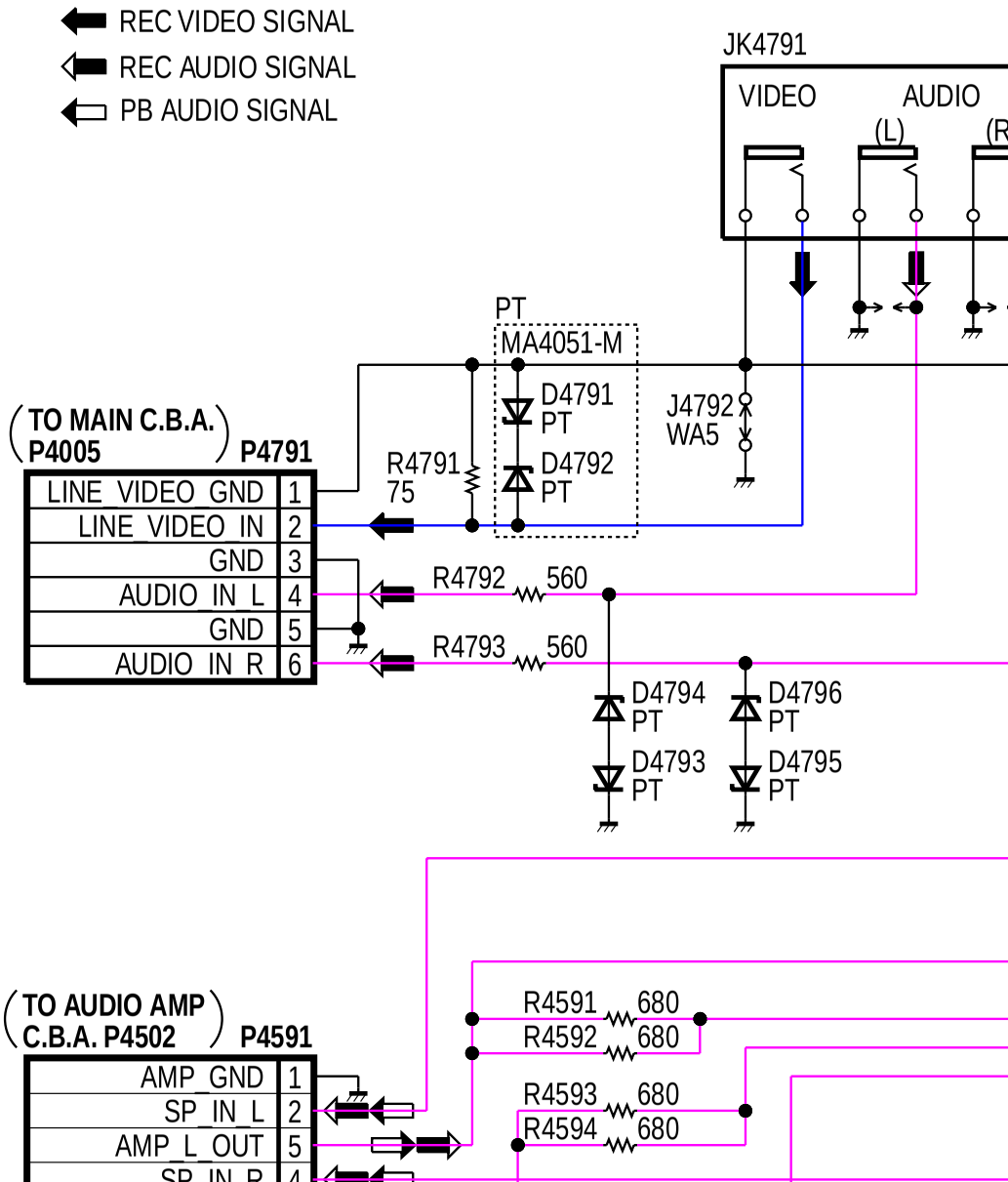

8.11. Hi-Fi AUDIO/VIDEO HEAD AMP SCHEMATIC DIAGRAM

Hi-Fi AUDIO/VIDEO HEAD AMP SCHEMATIC DIAGRAM

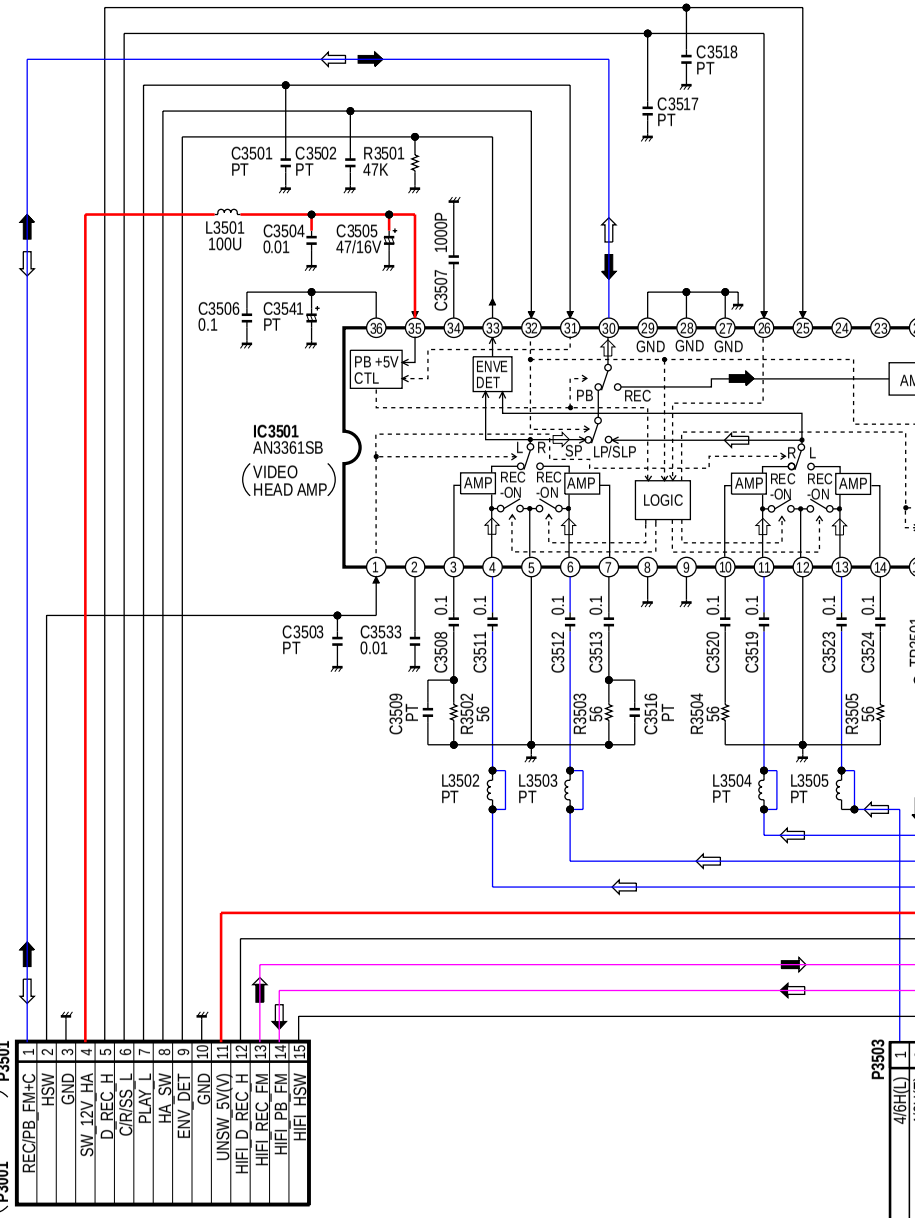

8.11. Hi-Fi AUDIO/VIDEO HEAD AMP SCHEMATIC DIAGRAM

Hi-Fi AUDIO/VIDEO HEAD AMP SCHEMATIC DIAGRAM

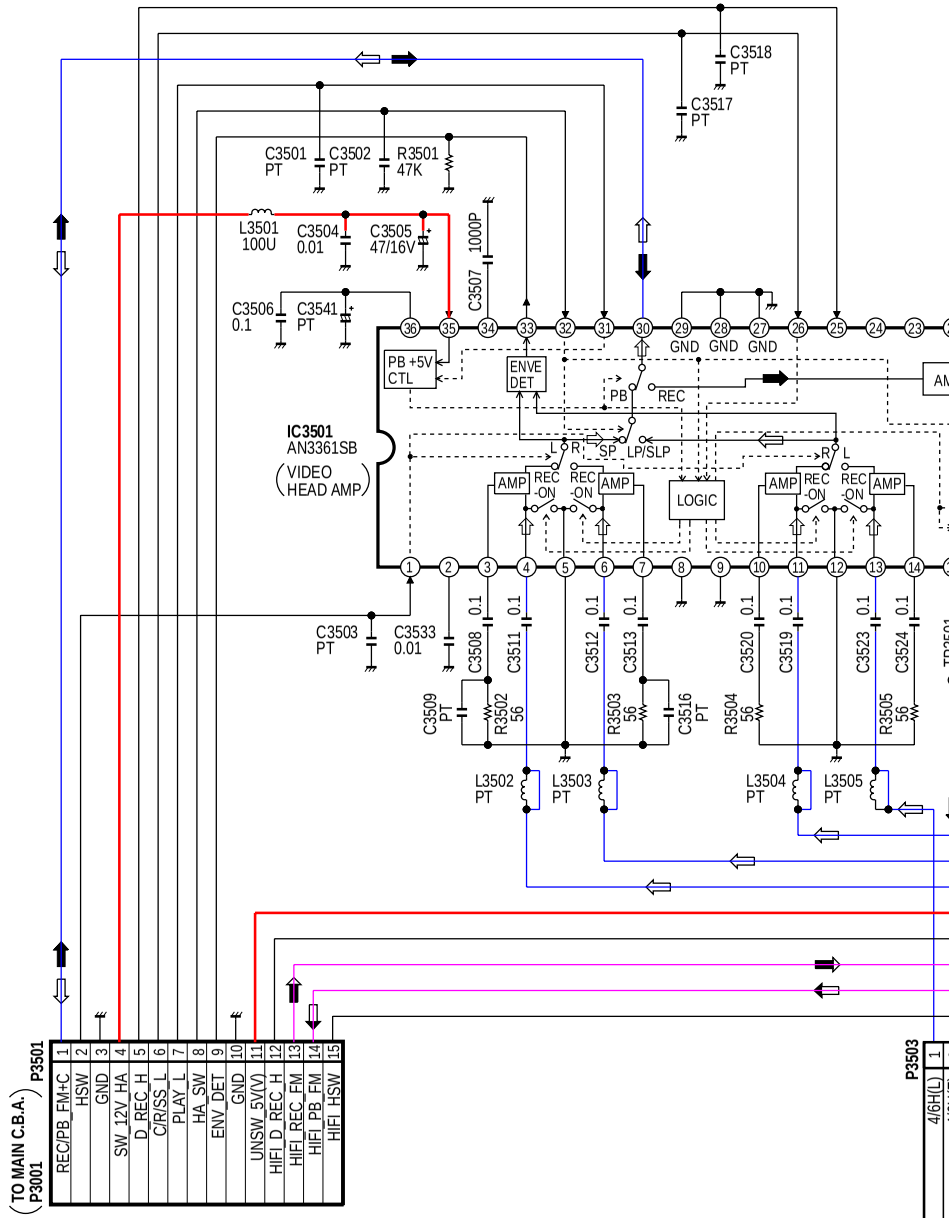

8.12. DVD DECODER SCHEMATIC DIAGRAMS

DVD DECODER I SCHEMATIC DIAGRAM

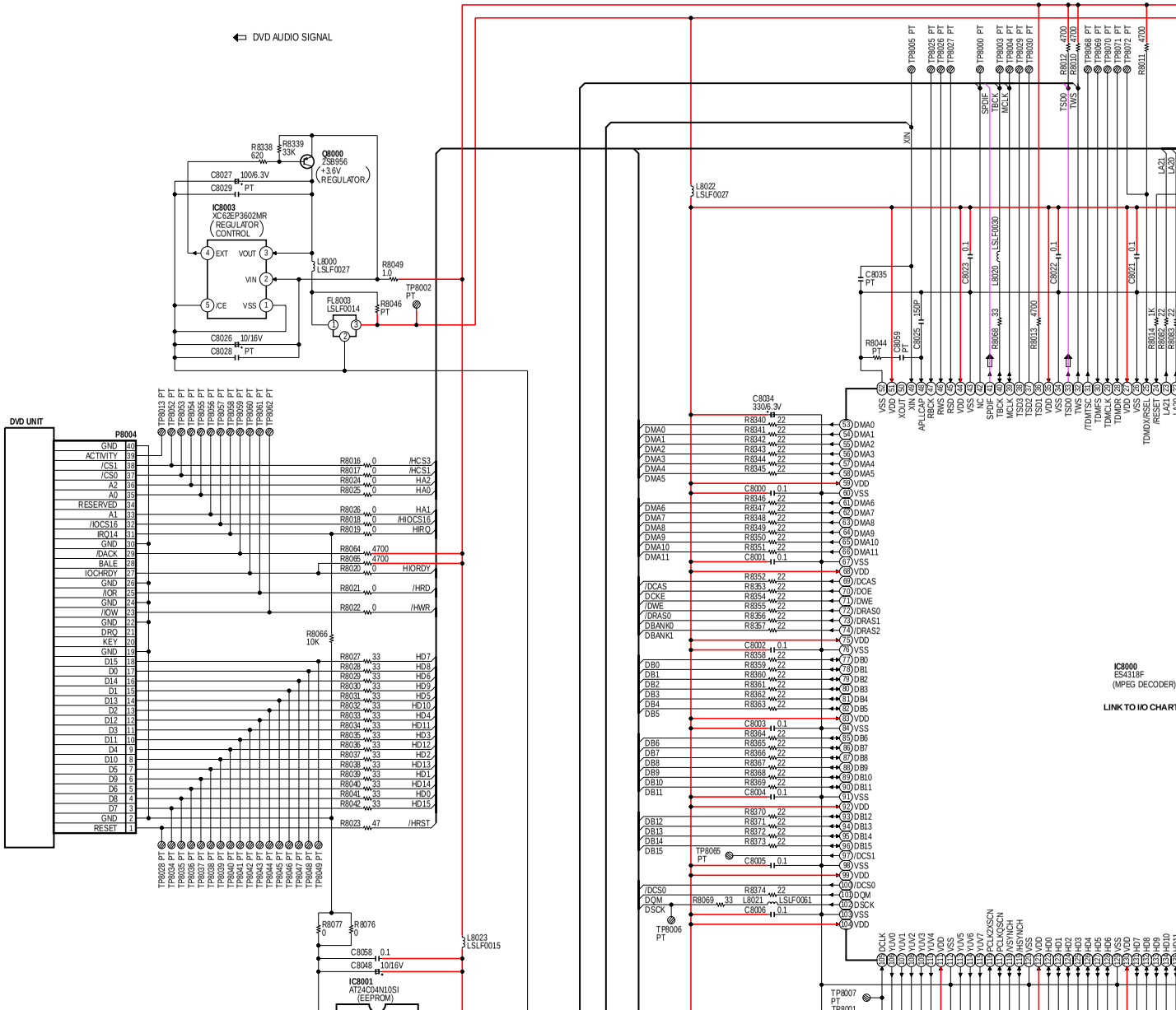

8.12. DVD DECODER SCHEMATIC DIAGRAMS

DVD DECODER I SCHEMATIC DIAGRAM

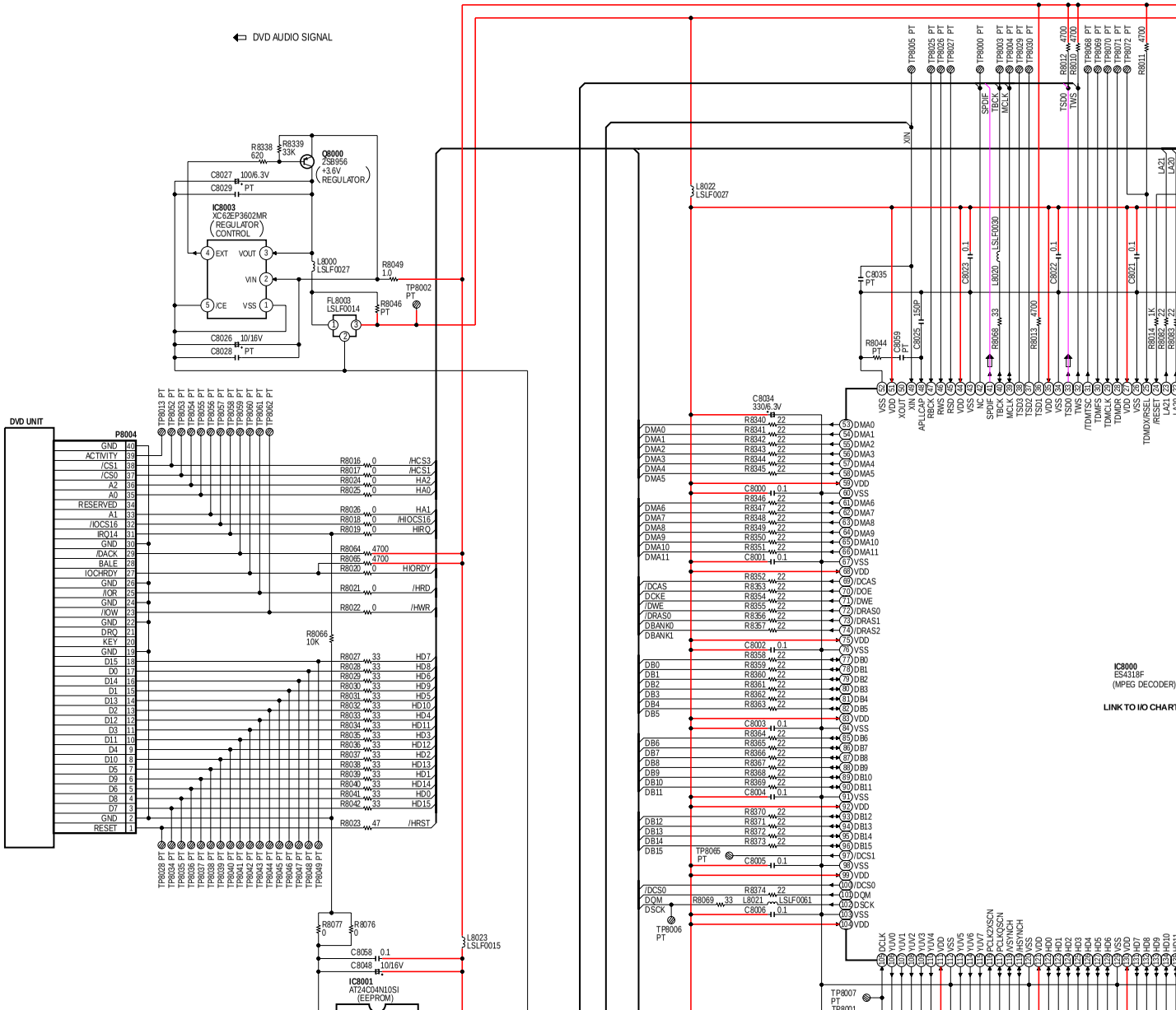

DVD DECODER II SCHEMATIC DIAGRAM

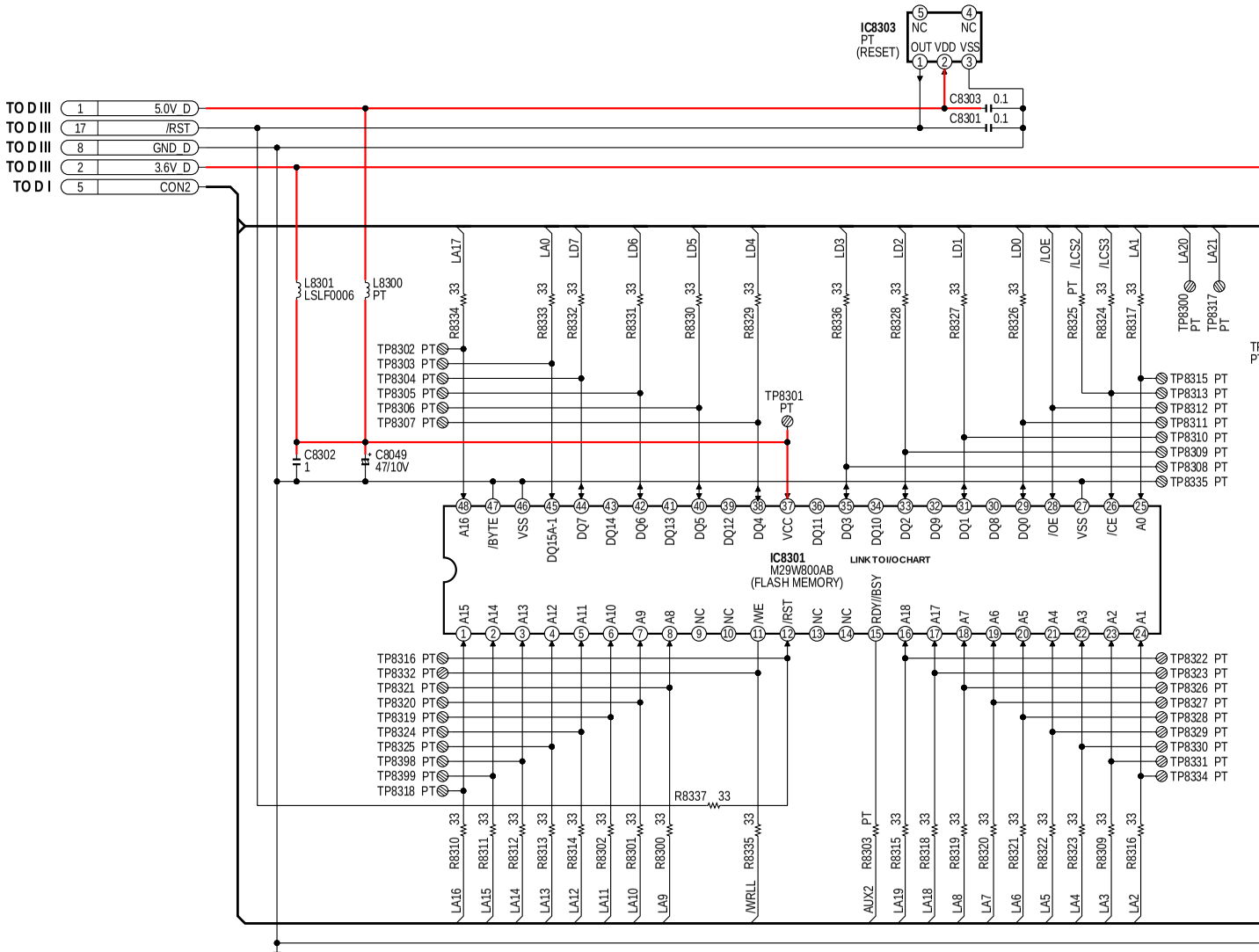

DVD DECODER II SCHEMATIC DIAGRAM

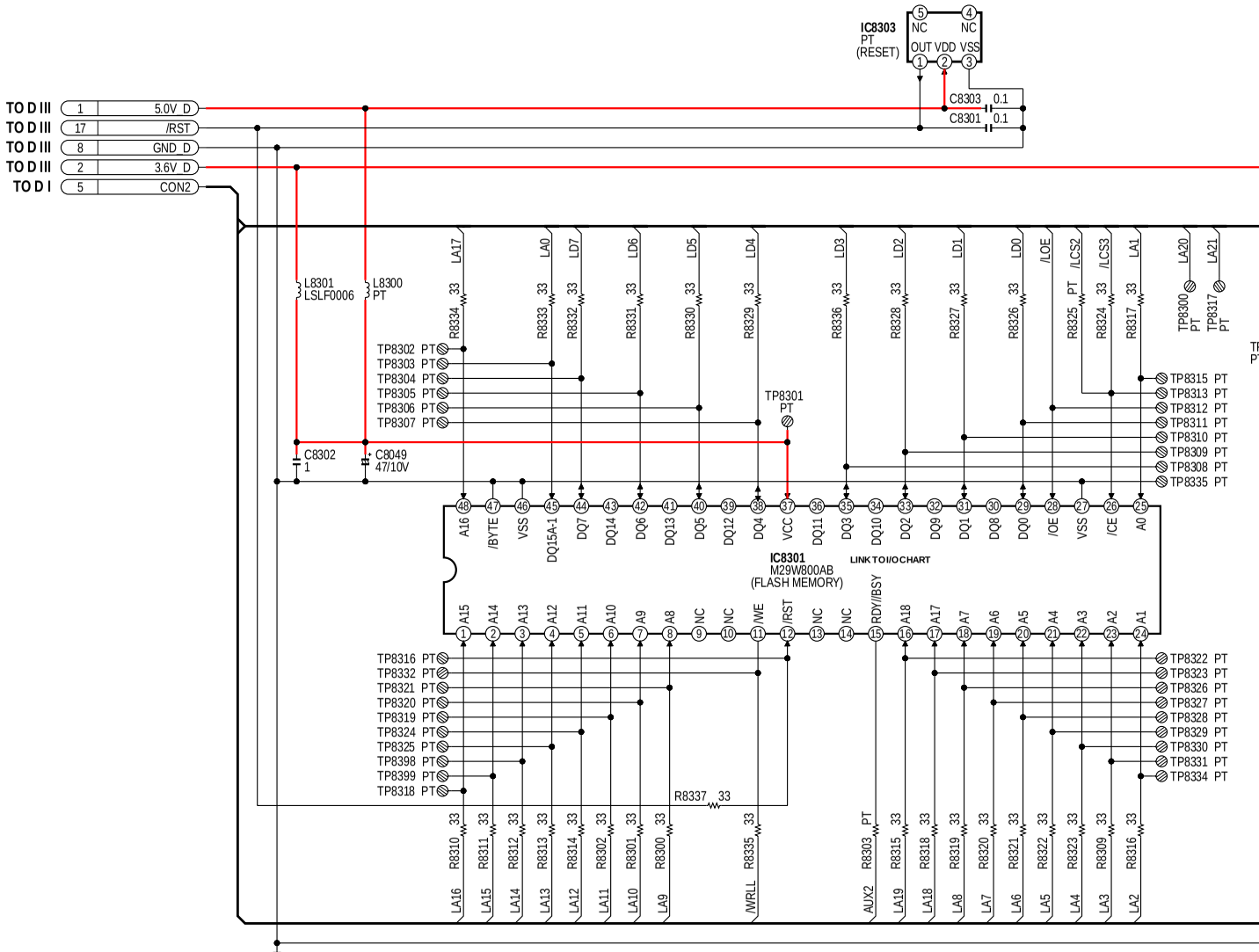

DVD DECODER III SCHEMATIC DIAGRAM

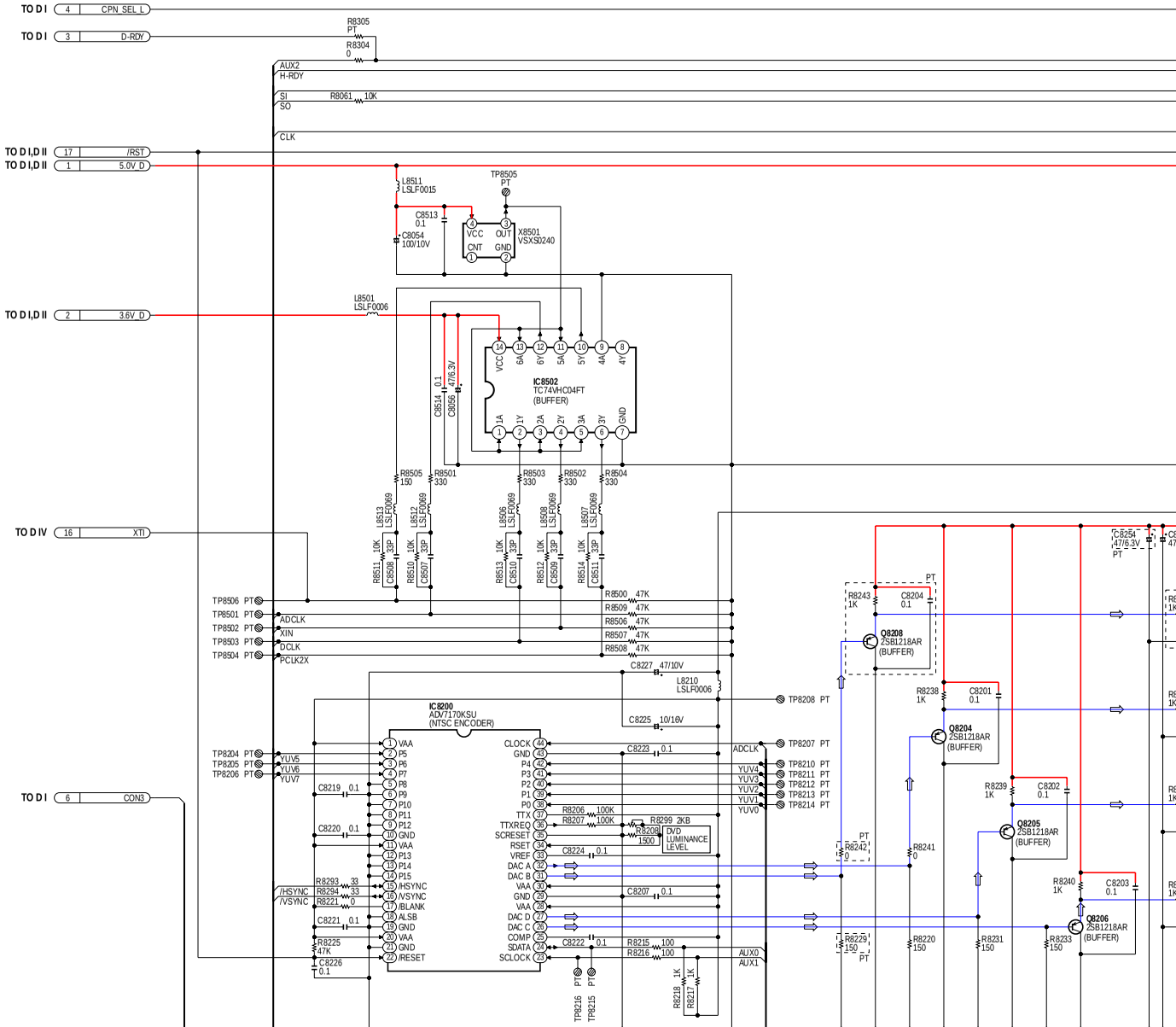

DVD DECODER III SCHEMATIC DIAGRAM

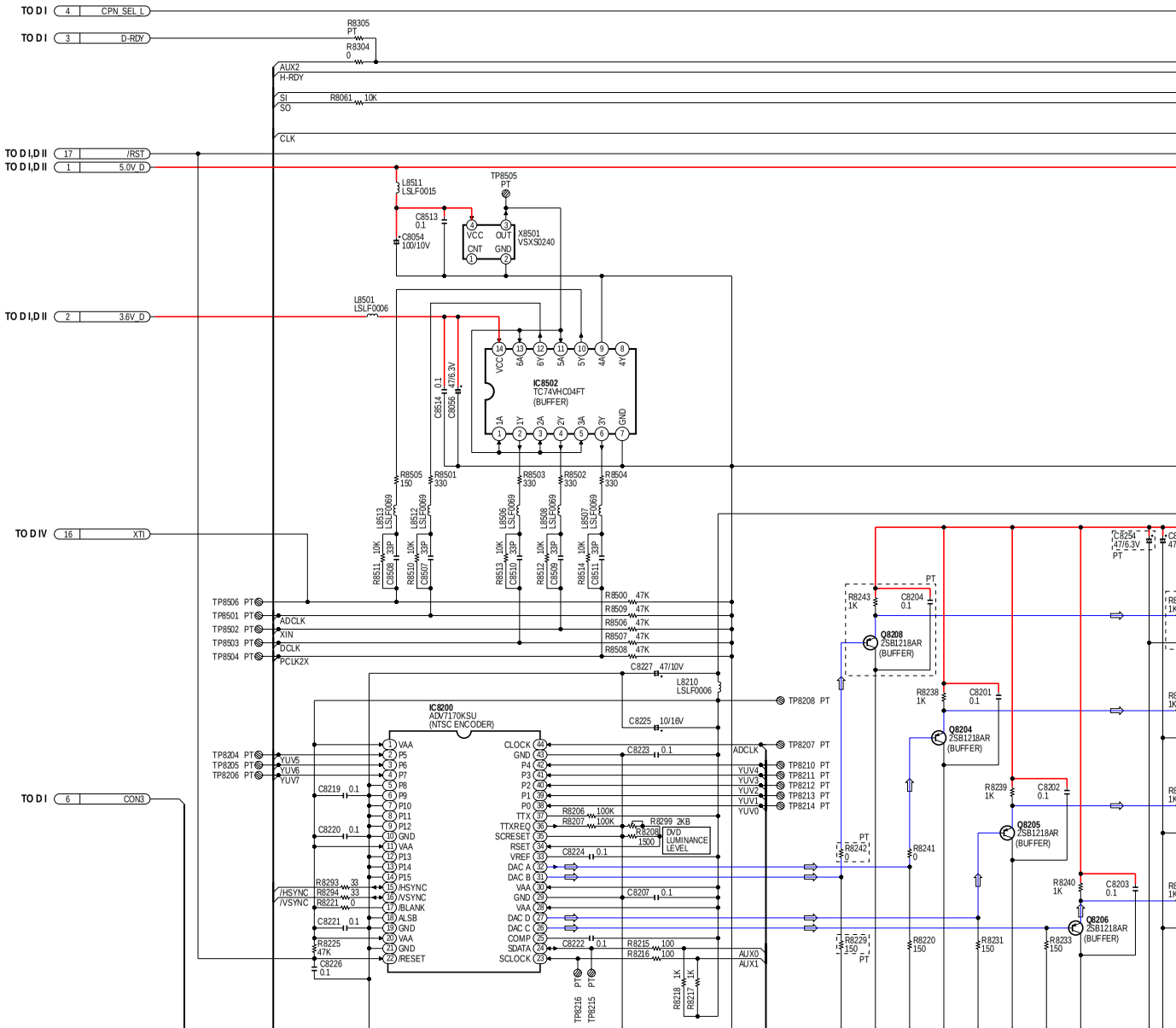

DVD DECODER IV SCHEMATIC DIAGRAM

I/O CHART OF IC8403

Pin No.	I/O	Signal Name	Description
1	I	XTI	27MHz clock
2	O	SCKO	System clock
3	I	VCP	+5.0V
4	-	NC	(Not used)
5	-	MCKO	(Not used)
6	I	ML	Mode control latch
7	I	MC	Mode control clock
8	I	MD	Mode control data
9	I	RSTB	Audio DAC reset : low
10	-	ZERO	(Not used)
11	O	V OUT R	Audio R-CH
12	-	GNDA	Ground
13	I	VCA	+5.0V
14	O	V OUT L	Audio L-CH
15	-	CAP	Audio common
16	I	BCKIN	Audio bit clock
17	I	DIN	Audio serial data
18	I	LRCIN	Audio left/right clock
19	-	NC	(Not used)
20	-	RSV	(Not used)
21	I	VDD	+5.0V
22	-	GNDD	Ground
23	-	GNDP	Ground
24	-	XTO	(Not used)

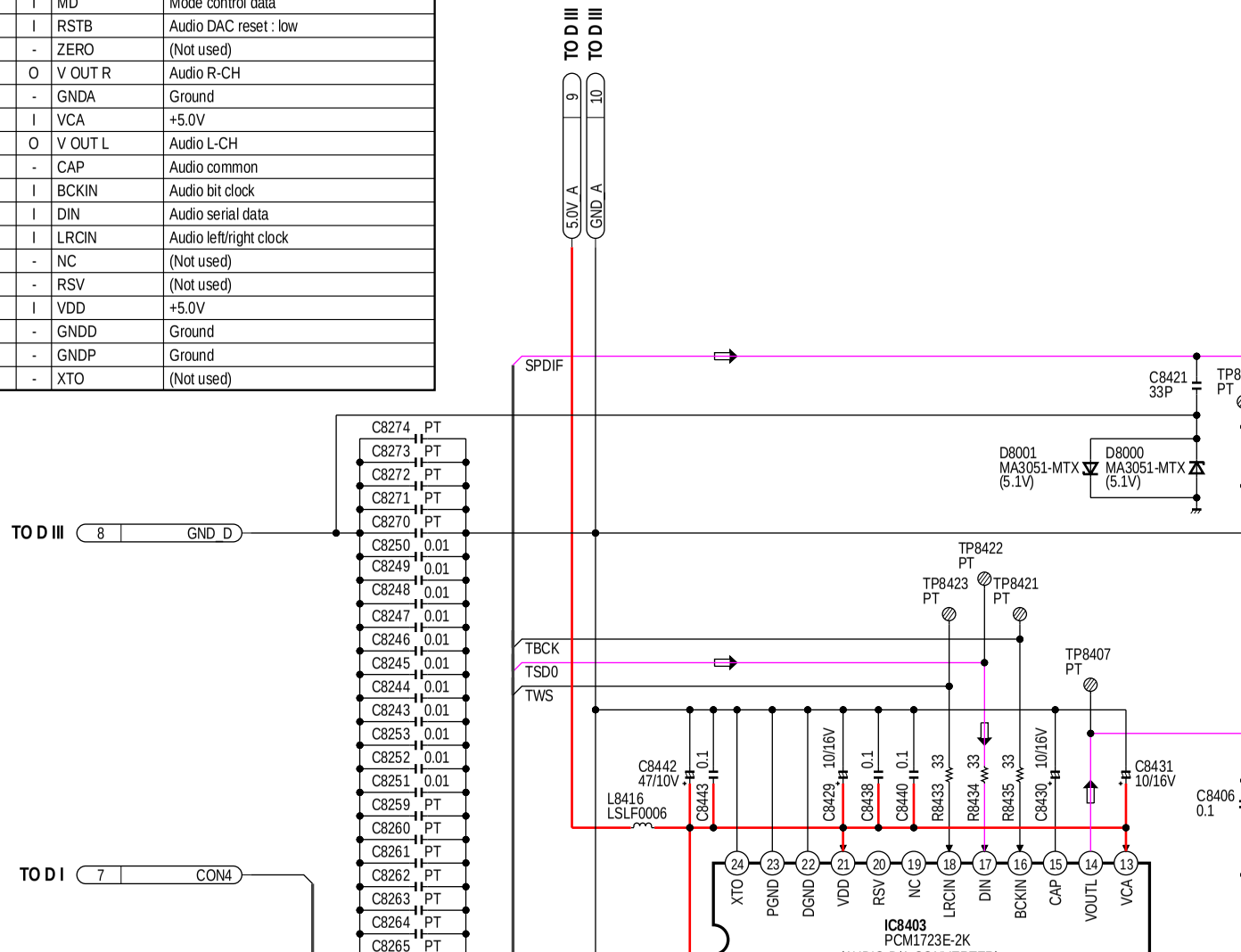

DVD DECODER IV SCHEMATIC DIAGRAM

I/O CHART OF IC8403

Pin No.	I/O	Signal Name	Description
1	I	XTI	27MHz clock
2	O	SCKO	System clock
3	I	VCP	+5.0V
4	-	NC	(Not used)
5	-	MCKO	(Not used)
6	I	ML	Mode control latch
7	I	MC	Mode control clock
8	I	MD	Mode control data
9	I	RSTB	Audio DAC reset : low
10	-	ZERO	(Not used)
11	O	V OUT R	Audio R-CH
12	-	GNDA	Ground
13	I	VCA	+5.0V
14	O	V OUT L	Audio L-CH
15	-	CAP	Audio common
16	I	BCKIN	Audio bit clock
17	I	DIN	Audio serial data
18	I	LRCIN	Audio left/right clock
19	-	NC	(Not used)
20	-	RSV	(Not used)
21	I	VDD	+5.0V
22	-	GNDD	Ground
23	-	GNDP	Ground
24	-	XTO	(Not used)

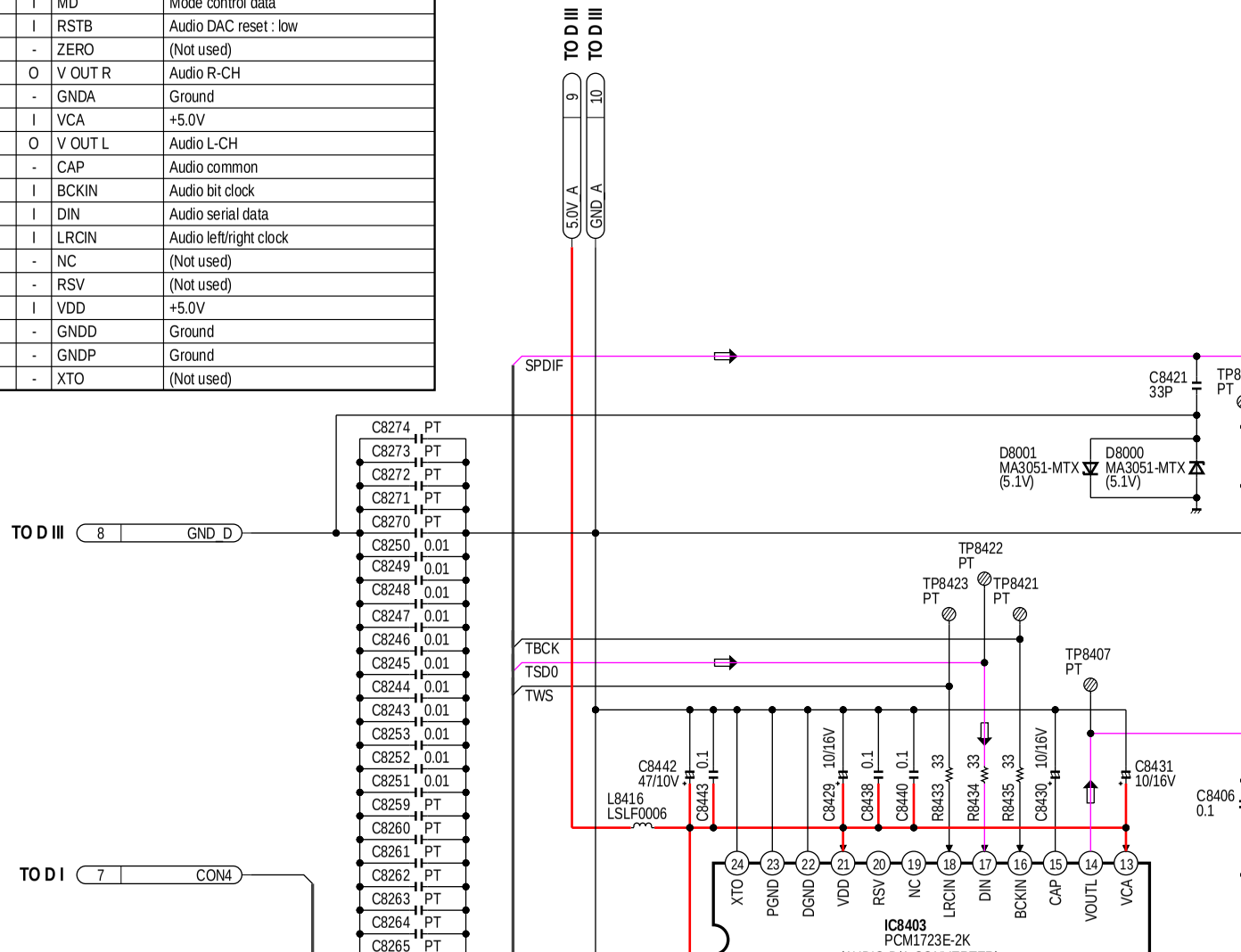

8.13. INTERCONNECTION SCHEMATIC DIAGRAM

INTERCONNECTION SCHEMATIC DIAGRAM

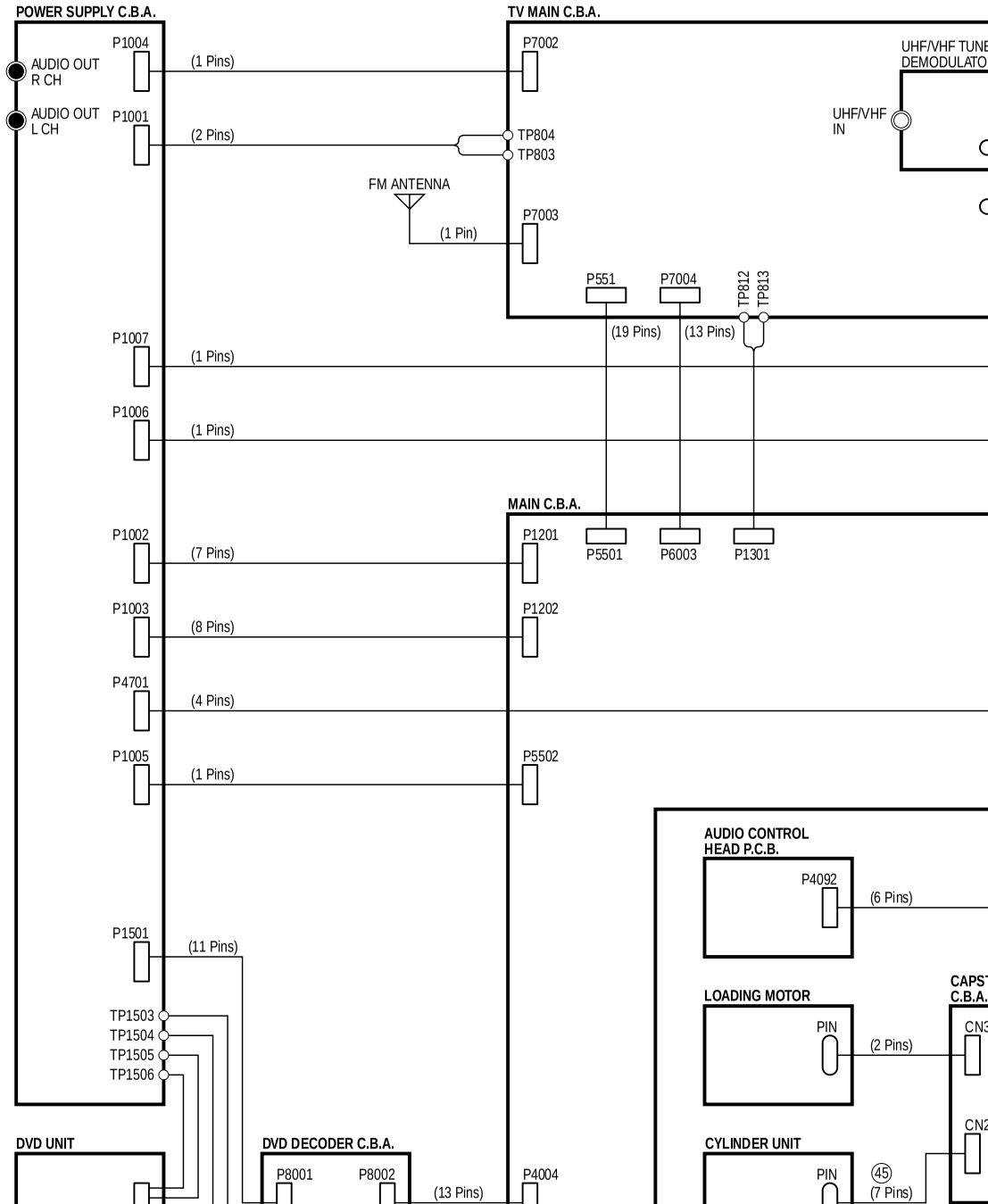

8.13. INTERCONNECTION SCHEMATIC DIAGRAM

INTERCONNECTION SCHEMATIC DIAGRAM

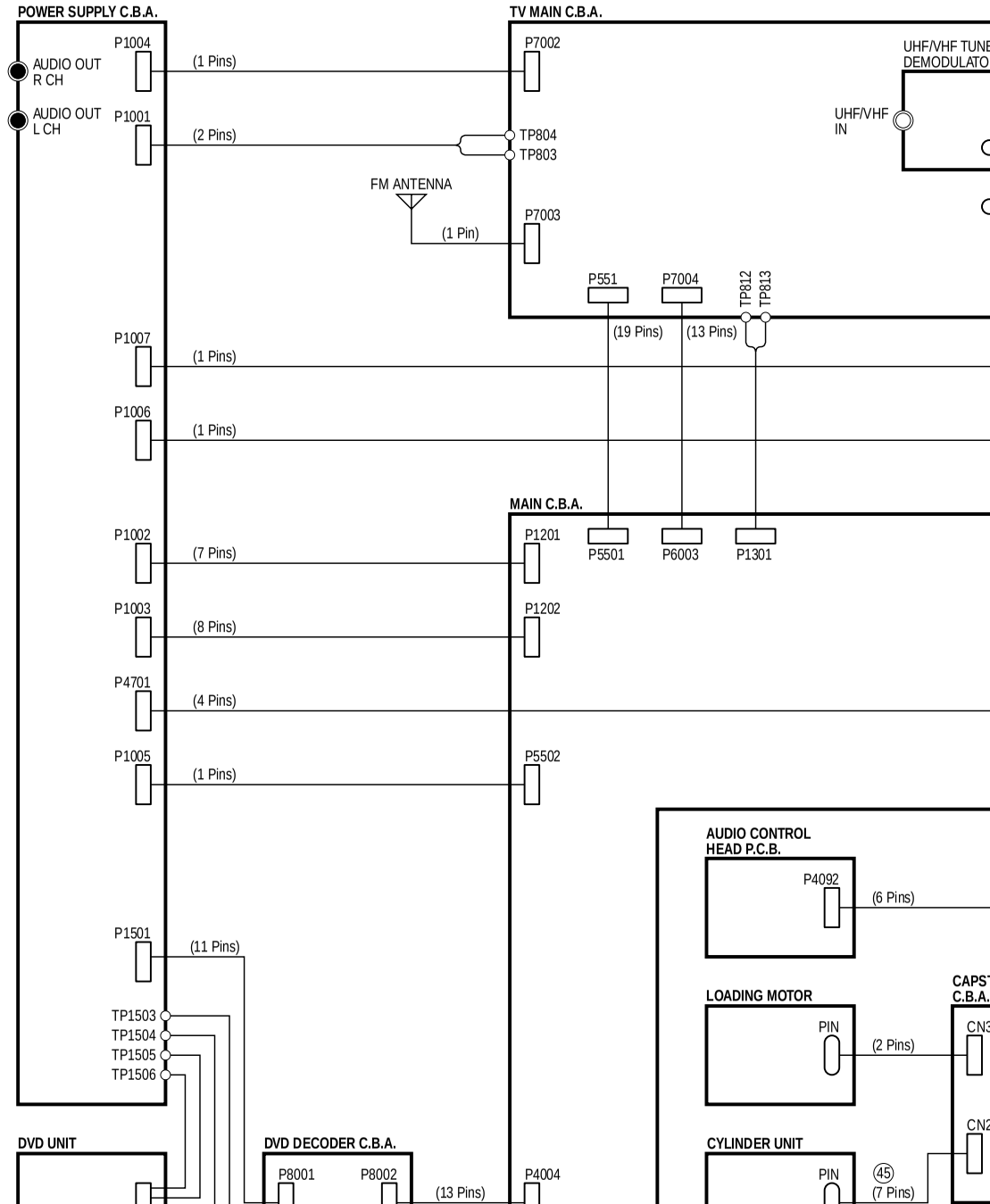

NOTE:
FOR SCHEMATIC DIAGRAM AND CIRCUIT BOARD LAYOUT NOTES, REFER TO BEGINNING OF SCHEMATIC SECTION.

MAIN C.B.A. (POWER SUPPLY/VIDEO/AUDIO SECTION)

MODE / PIN NO.	STOP
IC1301	
1	0.1
2	0.1
3	0.5
4	0.5
IC1302	
1	0.1
2	0
3	2.1
IC3001	
1	0.1
2	0
3	2.1
4	5.0
5	2.7
6	---
7	5.1
8	5.2
9	2.2
10	2.8
11	0.8
12	2.8
13	0.3
14	0.4
15	1.0
16	3.1
17	2.3
18	0.3
19	0.3
20	3.1
21	5.0
22	2.0
23	0.3
24	0.3
25	0.3
26	0.3
27	0.3
28	0
29	0.2
30	0.2
31	2.0
32	2.4
33	0.2
34	0.2
35	---
36	0.2
37	0.2
38	4.5
39	0.3
40	0.2
41	0.2
42	0
43	3.4
44	2.6
45	2.6
46	2.6
47	5.0
48	---
49	0.1
50	---
51	5.0
52	2.6
53	2.5
54	---
55	---
56	4.4
57	2.6
58	2.6
59	2.6
60	2.6
61	2.5
62	0
63	0
64	---
65	2.5
66	2.6
67	2.6
68	5.0
69	2.6
70	0.2
71	---
72	2.6
73	2.6
74	0
75	0.1
76	3.4
77	0
78	2.1
79	3.0
80	2.1
81	2.5
82	2.8
83	2.6
84	2.5
IC3201	
1	3.1
2	5.0
3	0
4	3.0
5	2.9
6	-2.8
7	2.1
8	2.9
IC3301	
1	0.2
2	0.2
3	0.2
4	0
5	0.2
6	0.2
7	5.0
8	---
9	0.2
10	0.3
11	0.3
12	0.3
13	0.4
14	0.4
15	0.4
16	---
17	0.4
18	0.4
19	0.4
20	0.4
21	0.4
22	0.4
23	0.4
24	---
25	---
26	---
27	---
28	---
29	0.2
30	0.2
31	0.2
32	0.3
33	---
34	---
35	---
36	---
37	---
38	5.2
39	0.2
40	0.2
41	0.2
42	---
43	5.0
44	0.3
45	0.3
46	---
47	---
48	---
IC3302	
1	2.5
2	0
3	2.7
4	0
5	3.4
6	5.0
7	1.7
8	0
IC5301	
1	2.8
2	2.9
3	3.7
4	0.3
5	2.0
6	2.1
7	6.1
8	0.4
9	0
10	3.9
11	5.2
12	2.4
13	4.3
14	6.2
15	4.4
16	0.7
17	0
18	0.1
19	1.8
20	0
21	3.7
22	3.6
23	3.6
24	9.2
25	3.6
26	9.2
27	0.1
28	0.1
29	0.1
30	5.9
31	6.3
32	3.6
33	7.3
34	8.3
35	5.2
36	4.3
37	9.7
38	9.2
39	0.4
40	2.4
41	2.4
42	0.1
43	0.1
44	0.1
45	---
46	0.1
47	0.1
48	2.7
IC5351	
1	0
2	0
3	3.4
4	0
5	3.4
6	5.0
7	1.4
8	0
IC5361	
1	2.5
2	5.0
3	2.5
4	0
5	2.3
6	5.0
7	1.0
8	0
Q1301	
E	0
C	0.3
B	0.5
Q1302	
E	0
C	160.8
B	0.3
Q3001	
E	1.7
C	0
B	1.0
Q3002	
E	2.9
C	5.0
B	3.5
Q3004	
E	1.7
C	0
B	1.1
Q3301	
E	2.3
C	0
B	1.7
Q3305	
E	0
C	0.2
B	0
Q4001	
E	5.0
C	0
B	4.3
Q4002	
E	0
C	0
B	0.8
Q4003	
E	0
C	0
B	0.8
Q4101	
E	0
C	0.6
B	0.5
Q4171	
E	0
C	0
B	0
Q5301	
E	3.1
C	9.0
B	3.7
Q5302	
E	7.5
C	9.0
B	8.1
Q5901	
E	9.0
C	12.0
B	9.8
TP3001	1.7
TP3002	2.8
TP3003	3.4
TP3004	2.0
TP3005	
TP3006	2.6
TP3007	2.8
TP3008	2.4
TP3009	8.6
TP3010	3.0
TP3011	2.7
TP3012	0
TP3212	2.9
TP3301	3.5
TP3302	5.2
TP4002	0
TP4003	0
TP5301	2.9
TP5302	3.0
TP5303	3.0
TP5304	12.2
TP5305	3.1
TP5307	3.1
TP5308	2.4
TP5310	0.4
TP5311	3.6
TP5312	11.5
TP5313	0.1
TP5401	3.9
TP5402	2.3
TP5403	5.1
TP5501	0.8
TP5502	0.1
TP5503	2.1
TP5504	0
TP5505	0
TP5506	5.2

VOLTAGE CHART
AG-527DVDE

NOTE:
FOR SCHEMATIC DIAGRAM AND CIRCUIT BOARD LAYOUT NOTES, REFER TO BEGINNING OF SCHEMATIC SECTION.

MAIN C.B.A. (SYSTEM CONTROL/SERVO SECTION)

MODE / PIN NO.	REC	PLAY
IC6001		
1	5.2	5.2
2	5.2	5.2
3	0.2	5.1
4	5.0	5.1
5	4.9	5.1
6	0.1	5.1
7	0	5.1
8	5.2	5.1
9	0.4	0.2
10	0	0.1
11	2.3	2.3
12	2.4	2.4
13	0.1	0.1
14	5.0	4.8
15	5.0	4.9
16	4.9	4.9
17	5.2	5.2
18	4.9	5.2
19	0.5	0.4
20	0.1	0.1
21	5.1	5.1
22	0.3	0.3
23	2.6	2.6
24	0	0
25	5.2	5.2
26	0.1	2.6
27	0.1	2.6
28	0.1	0.1
29	5.1	0
30	0.6	5.1
31	0	0.1
32	0.1	0.5
33	2.7	2.7
34	2.5	2.6
35	0	0.1
36	5.0	5.0
37	2.5	5.1
38	2.4	5.1
39	0	0
40	0.3	0
41	0.1	0.3
42	0.1	0.1
43	4.4	0.1
44	4.8	0.1
45	2.3	0.1
46	5.1	5.1
47	0	0.1
48	0	0
49	0.1	0.1
50	2.8	2.8
51	5.0	5.0
52	4.4	4.4
53	5.2	5.1
54	0	0

MODE / PIN NO.	REC	PLAY
55	0.1	5.1
56	5.1	5.1
57	4.8	---
58	-0.3	0.2
59	0.1	0
60	2.6	0.2
61	-0.7	0.2
62	0	-0.8
63	0.1	0.2
64	0.1	0.2
65	1.4	1.4
66	4.7	4.8
67	2.4	2.4
68	0	0
69	2.6	0.2
70	2.6	3.1
71	0	0
72	0.2	2.6
73	5.0	5.0
74	0.2	2.6
75	0.4	---
76	2.6	2.6
77	0.1	0.3
78	2.5	2.5
79	0.1	0
80	5.1	5.1
81	5.2	5.1
82	2.5	0.1
83	0.1	0.1
84	0.1	0.1
85	5.2	5.2
86	5.2	5.2
87	5.2	5.2
88	5.2	5.2
89	5.2	5.2
90	0.2	0.1
91	0.2	0.1
92	0	0.1
93	0.1	0.1
94	0.1	0.1
95	0.3	0
96	5.1	5.1
97	0.5	0
98	2.6	2.6
99	5.0	0.1
100	0.1	0.1
IC6002		
1	2.3	2.4
2	0	0
3	0	0
4	---	---
IC6003		
1	1.2	1.3
2	2.3	2.4
3	0	0

MODE / PIN NO.	REC	PLAY
4	0	3.6
IC6004		
1	0	0
2	0	0
3	0	0
4	0	0
5	5.2	5.2
6	5.1	5.1
7	0	0
8	5.0	5.0
IC6005		
1	5.1	5.2
2	5.0	5.0
3	0	0
4	0	0
5	5.0	5.0
6	0	0
Q6001		
E	12.2	12.2
C	11.9	0.6
B	11.3	12.3
Q6002		
E	4.4	0
C	11.3	12.2
B	5.0	0
Q6003		
E	0	0
C	0.1	0.2
B	0.6	0.6
Q6004		
E	5.0	5.1
C	5.0	5.1
B	4.3	4.4
Q6005		
E	5.1	5.2
C	5.0	5.1
B	4.3	4.3
Q6006		
E	0	0
C	5.0	0
B	0	0
Q6009		
E	0	0
C	5.0	5.0
Q6010		
E	0	0
C	4.8	5.1
TP6001	5.0	5.0
TP6002	4.2	4.9
TP6003	3.5	3.0
TP6004	---	5.1
TP6005	3.5	3.3

MODE / PIN NO.	REC	PLAY
TP6006	0	0
TP6008	0.1	0.1
TP6009	5.2	5.2
TP6013	2.6	2.6
TP6021	0.1	0.1
TP6022	3.8	3.7
TP6023	0.1	0.1
TP6099	5.0	5.0
TP6101	0.3	0.3
TP6103	5.2	5.1
TP6104	5.2	5.1
TP6105	5.2	5.2
TP6106	5.2	5.2
TP6107	0	0
TP6202	2.5	2.5
TP6203	2.6	2.6
TP6204	1.2	1.2
TP6205	2.6	2.6
TP6206	3.0	2.5
TP6207	2.6	2.5
TP6208	2.6	2.7
TP6209	2.4	2.4

VOLTAGE CHART
AG-527DVDE

NOTE:
FOR SCHEMATIC DIAGRAM AND CIRCUIT BOARD LAYOUT NOTES, REFER TO BEGINNING OF SCHEMATIC SECTION.

POWER SUPPLY C.B.A.

MODE / PIN NO.	STOP
IC1001	
1	5.2
2	4.2
3	0.6
4	0.1
IC1002	
1	0
2	0
3	4.2
IC1501	
1	177.2
2	0
3	0
4	13.4
5	0
IC1502	
1	5.1
2	4.0
3	2.3
4	13.3
IC1503	
1	2.6
2	0
3	4.0
IC1504	
1	0
2	0.1
3	1.6
4	12.0
5	12.0
Q1001	
E	0
C	162.2
B	0.3
Q1002	
E	0
C	0.3
B	0.6
Q1051	
E	12.0
C	14.0
B	12.7
Q1052	
E	0
C	0.1
B	0
Q1053	
E	5.2
C	5.3
B	5.9
Q1501	
E	0
C	0
B	0

MODE / PIN NO.	STOP
Q1502	
1	5.0
2	5.0
3	5.0
4	0
5	5.0
6	5.0
7	5.0
8	5.0
TP4701	0
TP4702	0

AUDIO C.B.A.

MODE / PIN NO.	STOP
IC4201	
1	2.6
2	2.5
3	2.5
4	2.5
5	2.5
6	5.1
7	2.6
8	1.6
9	0
10	2.6
11	2.6
12	2.6
13	2.3
14	---
15	0
16	0
17	0
18	0
19	0
20	0
21	0
22	0
23	0
24	---
25	2.6
26	2.6
27	2.6
28	0
29	1.6
30	0
31	5.2
32	0
33	0
34	0
35	2.5
36	---
37	2.5
38	2.6
39	12.2
40	0
41	---
42	0
43	0
44	0
45	6.1
46	6.1
47	---
48	---
IC4301	
1	0
2	0
3	0
4	0
5	0

MODE / PIN NO.	STOP
6	0
7	0
8	0
9	0
10	12.3
11	0
12	15.0
13	16.0
14	0
15	---
16	12.3
IC4302	
1	0
2	0
3	0
4	0
5	0
6	0
7	0
8	12.3
IC4601	
1	0.1
2	4.5
3	4.5
4	4.5
5	4.5
6	4.5
7	0
8	0
9	0
10	5.2
11	5.2
12	0.4
13	0.4
14	2.0
15	2.0
16	9.0
17	4.5
18	4.5
19	4.5
20	4.5
21	4.5
22	0
IC5651	
1	0
2	0.1
3	2.9
4	2.5
5	1.4
6	0
7	0
8	5.2
9	0
10	2.5
11	2.3

MODE / PIN NO.	STOP
12	3.5
13	4.0
14	1.7
15	3.6
16	5.1
IC9001	
1	3.8
2	4.1
3	2.9
4	9.1
5	1.4
6	0
7	3.4
8	4.5
9	1.3
10	3.5
11	4.6
12	4.6
13	4.2
14	4.2
15	4.0
16	4.2
17	0
18	0.7
19	4.2
20	4.1
21	1.8
22	4.2
23	4.2
24	4.2
25	4.2
26	1.8
27	4.2
28	4.1
29	4.2
30	4.1
IC9201	
1	2.9
2	3.6
3	5.1
4	4.4
5	0
6	5.1
7	4.4
8	3.0
9	3.1
Q4301	
E	12.0
C	14.0
B	12.7
Q4302	
E	5.9
C	12.0
B	6.5

MODE / PIN NO.	STOP
Q4303	
E	0
C	0
B	0.1
Q4304	
E	12.0
C	0
B	12.0
Q4305	
E	0
C	12.0
B	0
Q5651	
E	1.8
C	0
B	1.3
Q5652	
E	1.1
C	4.2
B	1.7
Q5653	
E	2.4
C	0
B	1.8
Q5654	
E	2.5
C	0
B	1.9
Q5655	
E	3.0
C	9.1
B	4.0
Q5656	
E	3.3
C	9.1
B	4.0
Q9001	
E	0.6
C	5.2
B	1.2
Q9002	
E	1.3
C	0.6
B	0.6
TP4201	0
TP4202	0
TP4205	0
TP4206	0
TP4207	0
TP4208	0
TP5651	2.4
TP5652	0
TP9001	0
TP9002	0

MODE / PIN NO.	STOP
TP9003	0
TP9201	0.6

AUDIO AMP C.B.A.

MODE / PIN NO.	STOP
IC4501	
1	2.1
2	2.3
3	0
4	2.3
5	2.1
6	7.1
7	10.4
8	2.3
9	21.0
10	0
11	2.3
12	10.1
Q4501	
E	0
C	0
B	0.1
Q4502	
E	0
C	0
B	0.1
Q4503	
E	21.0
C	27.0
B	21.6
TP4501	27.0
TP4502	0
TP4504	0
TP4505	0
TP4506	9.6
TP4507	6.9

TV MAIN C.B.A.

MODE / PIN NO.	STOP
IC501	
1	0
2	0
3	0
4	12.2
IC801	
1	0
2	122.4
3	125.7
4	121.3
5	0
Q501	
E	0
C	82.7
B	0
Q551	
E	0
C	393.4
B	0
Q571	
E	1.7
C	10.6
B	2.1
Q581	
E	121.3
C	0
B	120.5
Q801	
E	0
C	0
B	0.8
Q7001	
E	2.1
C	0
B	1.5
TP501	120.9
TP502	0
TP551	-14.3
TP552	-15.7
TP556	202.6
TP558	24.2
TP559	16.0
TP801	120.0
TP802	120.0
TP803	120.0
TP804	120.0
TP808	0
TP809	0
TP810	0
TP812	120.0
TP813	120.0
TP814	120.0
TP891	121.3

MODE / PIN NO.	STOP
TP892	125.7
TP893	0

VOLTAGE CHART
AG-527DVDE

NOTE:
FOR SCHEMATIC DIAGRAM AND CIRCUIT BOARD LAYOUT NOTES, REFER TO BEGINNING OF SCHEMATIC SECTION.

CRT C.B.A.

MODE / PIN NO.	STOP
IC351	
1	2.1
2	2.1
3	2.1
4	0
5	2.2
6	214.4
7	180.6
8	181.7
9	180.6
TP46	0
TP47	-3.0
TP48	0
TP49	0
TP50	162.8

VERTICAL C.B.A.

MODE / PIN NO.	STOP
IC451	
1	11.6
2	3.8
3	5.8
4	6.1
5	0
6	6.0
7	5.5
8	27.0
9	24.5
10	1.8
11	0
12	13.7
13	25.1
Q431	
E	2.9
C	0
B	2.2
Q432	
E	18.6
C	27.0
B	19.2
Q433	
E	19.1
C	14.3
B	18.5
Q434	
E	5.4
C	17.8
B	5.6
Q502	
E	0.7
C	12.2
B	0.2
Q541	
E	18.0
C	4.7
B	0
Q542	
E	0
C	18.0
B	0
TP553	0
TP554	0

AUDIO/VIDEO JACK C.B.A.

MODE / PIN NO.	STOP
TP4591	5.9
TP4592	3.7

DVD DECODER C.B.A.

MODE / PIN NO.	STOP
IC8000	
1	3.6
2	1.5
3	1.3
4	1.2
5	1.4
6	1.2
7	1.4
8	0
9	3.6
10	1.9
11	1.3
12	0.3
13	0.2
14	1.2
15	1.7
16	1.7
17	0
18	3.6
19	1.0
20	0.2
21	1.2
22	0
23	0
24	3.6
25	0.1
26	0
27	3.6
28	2.8
29	2.6
30	2.7
31	0.1
32	0.1
33	1.9
34	0
35	3.6
36	0.4
37	0.4
38	0.4
39	0.4
40	0.4
41	0.4
42	0.4
43	0
44	3.6
45	0.4
46	0.4
47	0.4
48	0.3
49	0.5
50	---
51	3.6
52	0
53	0.5
54	0.5
55	0.5
56	0.5
57	0.5
58	0.5
59	3.6
60	0
61	0.5
62	0.5
63	0.5
64	0.5
65	0.4
66	0.4
67	0
68	3.6
69	0.5
70	0.5
71	0.5
72	0.5
73	0.5
74	0.5
75	3.6
76	0
77	0.4
78	0.4
79	0.4
80	0.4
81	0.4
82	0.4
83	3.6
84	0
85	0.4
86	0.4
87	0.4
88	0.4
89	0.4
90	0.4
91	0
92	3.6
93	0.3
94	0.3
95	0.3
96	0.3
97	0.4
98	0
99	3.6
100	0.4
101	0.4
102	0.4
103	0
104	3.6
105	0.4
106	0.4
107	0.4
108	0.4
109	0.4
110	0.4
111	3.6
112	0
113	0.4
114	0.3
115	0.3
116	0.5
117	0.4
118	0.3
119	0.3
120	0
121	3.6
122	0.4
123	0.4
124	0.4
125	0.4
126	0.4
127	0.4
128	0.4
129	0
130	3.6
131	0.4
132	0.8
133	0.4
134	0.4
135	0.4
136	0.4
137	0.4
138	0
139	3.6
140	0.4
141	0.4
142	0.3
143	0.3
144	0.2
145	0.3
146	0.5
147	0
148	3.6
149	0.4
150	0.4
151	0.4
152	0.8
153	0.3
154	0.4
155	0.4
156	0
157	3.6
158	0.4
159	5.0
160	0.4
161	0.4
162	0.4
163	0
164	3.6
165	0.4
166	1.2
167	0.4
168	1.1
169	0.4
170	0.3
171	0
172	3.6
173	---
174	0.3
175	0.3
176	0
177	0
178	0.4
179	0.4
180	0.4
181	0.4
182	0.4
183	3.6
184	0
185	0.4
186	0.4
187	0.4
188	0.4
189	0.4
190	0.4
191	0.4
192	0
193	3.6
194	0.4
195	0.4
196	0.4
197	0.4
198	0.3
199	---
200	0
201	3.6
202	---
203	---
204	0.3
205	0.3
206	0.4
207	0.4
208	0
IC8001	
1	0
2	0
3	0
4	0
5	0.4
6	0.4
7	0
8	5.0
IC8002	
1	0
2	0.4
3	0.4
4	0.4
5	0.3
6	0.3
7	0.4
8	0.4
9	0.3
10	0
11	0.3
12	0.3
13	0.4
14	0.4
15	0.3
16	0.3
17	0.4
18	0.4
19	---
20	5.0
IC8003	
1	0
2	3.6
3	0.5
4	0.5
5	0
IC8100	
1	3.6
2	0.7
3	3.6
4	0.6
5	0.9
6	0
7	1.0
8	1.2
9	3.6
10	0.9
11	0.9
12	0
13	1.2
14	3.6
15	0
16	3.5
17	3.5
18	3.5
19	0
20	0.1
21	0
22	0.1
23	1.3
24	1.2
25	1.0
26	1.9
27	3.6
28	0
29	0.1
30	1.6
31	1.5
32	1.0
33	1.0
34	0.2
35	3.2
36	---
37	3.6
38	1.5
39	0
40	---
41	0
42	0.8
43	3.6
44	0.8
45	0.9
46	0
47	0.5
48	0.5
49	3.6
IC8200	
1	0.4
2	0.3
3	0.3
4	0.3
5	0
6	0
7	0
8	0
9	0
10	0
11	0.4
12	0
13	0
14	0
15	0.3
16	0.3
17	0.4
18	0
19	0
20	0.4
21	0
22	0.1
23	0.4
24	0.4
25	0.2
26	0
27	0
28	0.4
29	0
30	0.4
31	0
32	0.3
33	0.1
34	0
35	0
36	0.3
37	0.3
38	0.3
39	0.3
40	0.3
41	0.3
42	0.4
43	0
44	0.4
IC8201	
1	0
2	5.1
3	3.7
IC8301	
1	2.2
2	2.5
3	0.1
4	0.6
5	0.1
6	0.6
7	0.6
8	0.6
9	---
10	---
11	0.6
12	0.1
13	---
14	---
15	0.4
16	0.6
17	0.1
18	0.1
19	0.1
20	0
21	0
22	0
23	0
24	0.1
25	0.9
26	3.6
27	0
28	3.6
29	0.9
30	---
31	0.8
32	---
33	1.0
34	---
35	0.9
36	---
37	3.6
38	0.9
39	---
40	0.2
41	---
42	0.9
43	---
44	0
45	0
46	0
47	0
48	0
IC8401	
1	6.1
2	6.1
3	6.1
4	0
5	6.1
6	6.1
7	6.1
8	12.2
IC8403	
1	0.4
2	0.4
3	5.0
4	---
5	---
6	0.3
7	0.3
8	0.3
9	0.3
10	0.3
11	0.1
12	0
13	5.0
14	0
15	0.3
16	0.4
17	0.4
18	0.4
19	---
20	---
21	5.0
22	0
23	0
24	0
IC8502	
1	0
2	0.3
3	0.5
4	0
5	0.3
6	0.5
7	0

VOLTAGE CHART
AG-527DVDE

NOTE:
FOR SCHEMATIC DIAGRAM AND CIRCUIT BOARD LAYOUT NOTES, REFER TO BEGINNING OF SCHEMATIC SECTION.

MODE / PIN NO.	STOP
8	---
9	0
10	0
11	0.4
12	0.3
13	0
14	3.6
Q8000	
E	0.7
C	0.7
B	0.5
Q8003	
E	0
C	0
B	4.0
Q8200	
E	0.1
C	0
B	0.5
Q8201	
E	0.3
C	0
B	0.2
Q8202	
E	0.3
C	0
B	0.5
Q8204	
E	0
C	0
B	0.1
Q8205	
E	0.1
C	0
B	0.4
Q8206	
E	0
C	0
B	0
Q8207	
E	1.9
C	0
B	0.6
Q8208	
E	1.6
C	0
B	0.9
TP8000	0.4
TP8001	0.1
TP8002	3.6
TP8003	0.4
TP8004	0.4
TP8005	0.3

MODE / PIN NO.	STOP
TP8006	0.5
TP8007	0.1
TP8008	0.2
TP8009	0.3
TP8010	0.2
TP8011	0.2
TP8012	5.0
TP8013	0.7
TP8014	0
TP8015	0.4
TP8016	0
TP8017	0
TP8018	0.4
TP8019	4.4
TP8020	0.4
TP8021	0
TP8022	5.0
TP8023	0.1
TP8024	0
TP8025	0.2
TP8026	0.4
TP8027	0.1
TP8028	0
TP8029	0
TP8030	0.4
TP8031	0.3
TP8032	0.3
TP8033	0.3
TP8034	0.4
TP8035	0.4
TP8036	0.4
TP8037	0.1
TP8038	0
TP8039	0.1
TP8040	0.4
TP8041	0.4
TP8042	0.4
TP8043	0
TP8044	0.4
TP8045	0
TP8046	0.1
TP8047	0
TP8048	0
TP8049	0
TP8051	5.0
TP8052	0.4
TP8053	0.1
TP8054	0.1
TP8055	0.3
TP8056	0.1
TP8057	0.1
TP8058	0.1
TP8059	0.1
TP8060	0.1
TP8061	0.1

MODE / PIN NO.	STOP
TP8062	0.4
TP8063	0.4
TP8065	0.1
TP8068	0.5
TP8069	0
TP8070	0.1
TP8071	0.1
TP8072	0.1
TP8100	3.6
TP8200	0.6
TP8201	0
TP8202	0.5
TP8203	0
TP8204	0.1
TP8205	0.4
TP8206	0.1
TP8207	0.1
TP8208	0.1
TP8209	0
TP8210	0.4
TP8211	0.4
TP8212	0.4
TP8213	0.4
TP8214	0.1
TP8215	0.1
TP8216	0.1
TP8300	0
TP8301	3.6
TP8302	0.4
TP8303	0.3
TP8304	0.4
TP8305	0.4
TP8306	0.4
TP8307	0.4
TP8308	0.4
TP8309	0.4
TP8310	0.4
TP8311	0.1
TP8312	0.3
TP8313	0.3
TP8315	0.1
TP8316	0
TP8317	0
TP8318	0.1
TP8319	0
TP8320	0
TP8321	0.5
TP8322	0
TP8323	0.5
TP8324	0.5
TP8325	0.1
TP8326	0
TP8327	0.1
TP8328	0
TP8329	0.4

MODE / PIN NO.	STOP
TP8330	0.1
TP8331	0.1
TP8332	0
TP8334	0
TP8335	0
TP8398	0.5
TP8399	0.5
TP8400	0.1
TP8401	0.1
TP8405	0
TP8407	0
TP8408	0.1
TP8415	0.3
TP8416	0.2
TP8417	0
TP8418	0
TP8419	0
TP8420	0
TP8421	0.4
TP8422	0.4
TP8423	0
TP8424	0
TP8501	0.3
TP8502	0.1
TP8503	0.1
TP8504	0.4
TP8505	0.1
TP8506	0.3

Hi-Fi AUDIO/VIDEO HEAD AMP C.B.A.

MODE / PIN NO.	STOP
IC3501	
1	0
2	0
3	0.5
4	0
5	0
6	0
7	0.5
8	0
9	0
10	0.5
11	0
12	0
13	0.1
14	0.1
15	---
16	2.4
17	2.4
18	0
19	---
20	---
21	---
22	---
23	---
24	---
25	0.2
26	5.1
27	0
28	0
29	0
30	2.5
31	5.2
32	4.9
33	0.2
34	0.1
35	11.9
36	0.1
IC4401	
1	0
2	4.0
3	0.6
4	0
5	4.0
6	4.0
7	1.0
8	0.7
9	2.6
10	5.1
11	0
12	0
13	3.9
14	3.9
15	0.1
16	13.0

VHS

Panasonic

Professional/ Industrial Video

TV/DVD/VCR Combination

Operating Instructions

Model No. AG-527DVDE

- Initial Setup and Connection Procedures are on pages 11 to 17.

DOLBY DIGITAL

dts DIGITAL OUT

DVD VIDEO

CD-R/RW playback
Ability to play back may depend on recording conditions

READY TO PLAY!

COMPACT disc DIGITAL VIDEO

COMPACT disc DIGITAL AUDIO

MP3 PLAYBACK

energy

As an ENERGY STAR Partner, Matsushita Electric Corporation of America has determined that this product or product model meets the ENERGY STAR guidelines for energy efficiency.

Please read these instructions carefully before attempting to connect, operate, or adjust this product.
Please save this manual.

PRO LINE

LSQT0620A

Important Safeguards and Precautions

READ AND RETAIN ALL SAFETY AND OPERATING INSTRUCTIONS. HEED ALL WARNINGS IN THE MANUAL AND ON UNIT

INSTALLATION

1 POWER SOURCE CAUTION

Operate only from power source indicated on unit or in this manual. If uncertain, have your Electric Utility Service Company or Video Products Dealer verify your home power source.

2 POWER CORD PLUG

For safety, this unit has a polarized type plug (one wide blade), or a three-wire grounding type plug. Always hold the plug firmly and make sure your hands are dry when plugging in or unplugging the AC power cord. Regularly remove dust, dirt, etc. on the plug.

POLARIZED PLUG CAUTION:

The plug fits into outlet only one way. If it cannot be fully inserted, try reversing it. If it still will not fit, have an electrician install the proper wall outlet. Do not tamper with the plug.

GROUNDING PLUG CAUTION:

The plug requires a three-hole grounding outlet. If necessary, have an electrician install the proper outlet. Do not tamper with the plug.

3 POWER CORD

To avoid unit malfunction, and to protect against electrical shock, fire or personal injury:

- Keep power cord away from heating appliances and walking traffic. Do not rest heavy objects on, or roll such objects over the power cord.
- Do not tamper with the cord in any way.
- An extension cord should have the same type plug (polarized or grounding) and must be securely connected.
- Overloaded wall outlets or extension cords are fire hazards.
- Frayed cords, damaged plugs, and damaged or cracked wire insulation are hazardous and should be replaced by a qualified electrician.

4 DO NOT BLOCK VENTILATION HOLES

Ventilation openings in the cabinet release heat generated during operation. If blocked, heat build-up may result in a fire hazard or heat damage to discs.

For your protection:

a. Never cover ventilation slots while unit is ON, or operate unit while placed on a bed, sofa, rug, or other soft surface.

b. Avoid built-in installation, such as a book case or rack, unless properly ventilated.

5 AVOID EXTREMELY HOT LOCATIONS OR SUDDEN TEMPERATURE CHANGES

Do not place unit over or near a heater or radiator, in direct sunlight, inside closed vehicles, in high temperature [over 95 °F (35 °C)], or in over 75% humidity. If unit is suddenly moved from a cold place to a warm one, moisture may condense in unit and on the tape causing damage. Never subject unit to vibration, impact, or place it so that the surface is tilted as internal parts may be seriously damaged.

6 TO AVOID PERSONAL INJURY

- Never place unit on support or stand that is not firm, level, and adequately strong. The unit could fall causing serious injury to a child or adult and damage to the unit.
- Move any appliance and cart combination with care. Quick stops, excessive force, and uneven surfaces may cause objects to overturn.
- Carefully follow all operating instructions.

OUTDOOR ANTENNA INSTALLATION

1 SAFE ANTENNA AND CABLE CONNECTION

An outside antenna or cable system must be properly grounded to provide some protection against built up static charges and voltage. Section 810 of the National Electrical Code, ANSI/NFPA 70 (in Canada, part 1 of the Canadian Electrical Code) provides information regarding proper grounding of the mast and supporting structure, grounding of the lead-in wire to an antenna discharge unit, size of grounding conductors, location of antenna discharge unit, connection to grounding electrodes, and requirements for the grounding electrode.

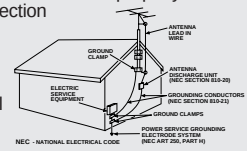

2 KEEP ANTENNA CLEAR OF HIGH VOLTAGE POWER LINES OR CIRCUITS

Locate an outside antenna system well away from power lines and electric light or power circuits so it will never touch these power sources should it ever fall. When installing antenna, absolutely never touch power lines, circuits or other power sources as this could be fatal.

USING THE UNIT

Before unit is brought out of storage or moved to a new location, refer again to the INSTALLATION section of these safeguards.

1 KEEP UNIT WELL AWAY FROM WATER OR MOISTURE, such as vases, sinks, tubs, etc.

2 IF EXPOSED TO RAIN, MOISTURE, OR STRONG IMPACT, unplug unit and have it inspected by a qualified service technician before use.

3 ELECTRICAL STORMS

During a lightning storm, or before leaving unit unused for extended periods of time, disconnect all equipment from the power source as well as the antenna and cable system.

4 WHEN UNIT IS PLUGGED IN

• DO NOT OPERATE IF:
- liquid has spilled into unit.
- unit was dropped or otherwise damaged.
- unit emits smoke, odours, or noises.

Immediately unplug unit, and have it inspected by a service technician to avoid potential fire and shock hazards.

• Never drop or push any object through openings in unit. Touching internal parts may cause electric shock or fire hazard. Do not put any foreign object on the tray.

• Keep magnetic objects, such as speakers, away from unit to avoid electrical interference.

5 USING ACCESSORIES

Use only accessories recommended by the manufacturer to avoid risk of fire, shock, or other hazards.

6 CLEANING UNIT

Unplug unit. Use a clean, dry, chemically untreated cloth to gently remove dust or debris. DO NOT USE cleaning fluids, aerosols, or forced air that could over-spray, or seep into unit and cause electrical shock. Any substance, such as wax, adhesive tape, etc. may mar the cabinet surface. Exposure to greasy, humid, or dusty areas may adversely affect internal parts.

SERVICE

1 DO NOT SERVICE PRODUCT YOURSELF

If, after carefully following detailed operating instructions, the unit does not operate properly, do not attempt to open or remove covers, or make any adjustments not described in the manual. Unplug unit and contact a qualified service technician.

2 REPLACEMENT OF PARTS

Make sure the service technician uses only parts specified by the manufacturer, or have equal safety characteristics as original parts. The use of unauthorized substitutes may result in fire, electric shock, or other hazards.

3 SAFETY CHECK AFTER SERVICING

After unit is serviced or repaired, request that a thorough safety check be done as described in the manufacturer's service literature to ensure video unit is in safe operating condition.

Safety Precautions/Mesures de sécurité

Warning : To prevent fire or shock hazard, do not expose this equipment to rain or moisture.
Caution : To prevent electric shock, match wide blade of plug to wide slot, fully insert.
Avertissement : Afin de prévenir tout risque d'incendie ou de chocs électriques, ne pas exposer cet appareil à la pluie ou à une humidité excessive.
Attention : Pour éviter les chocs électriques, introduire la lame la plus large de la fiche dans la borne correspondante de la prise et pousser jusqu'au fond.

FCC WARNING : Any unauthorized changes or modifications to this equipment would void the user's authority to operate.

This television receiver provides display of television closed captioning.

CAUTION:
UNIT IS A CLASS I LASER PRODUCT.
HOWEVER THIS UNIT USES A VISIBLE LASER BEAM WHICH COULD CAUSE HAZARDOUS RADIATION EXPOSURE IF DIRECTED. BE SURE TO OPERATE THE UNIT CORRECTLY AS INSTRUCTED.

WHEN THIS UNIT IS PLUGGED TO THE WALL OUTLET, DO NOT PLACE YOUR EYES CLOSE TO THE OPENING OF THE DISC TRAY AND OTHER OPENINGS TO LOOK INTO THE INSIDE OF THIS UNIT.

USE OF CONTROLS OR ADJUSTMENTS OR PERFORMANCE OF PROCEDURES OTHER THAN THOSE SPECIFIED HEREIN MAY RESULT IN HAZARDOUS RADIATION EXPOSURE.

DO NOT OPEN COVERS AND DO NOT ATTEMPT TO REPAIR THE UNIT YOURSELF. REFER SERVICING TO QUALIFIED PERSONNEL.

CAUTION:
LASER RADIATION WHEN OPEN. DO NOT STARE INTO BEAM.

ATTENTION:
RAYONNEMENT LASER EN CAS D'OUVERTURE. NE PAS REGARDER DANS LE FAISCEAU.

(Inside of product)

FCC NOTICE:
This equipment has been tested and found to comply with part 15 of the FCC Rules. These limits are designed to provide reasonable protection against harmful interference when operated in a residential environment. If this eqiupment does cause interference to radio or television reception, which can be determined by turning the equipment off and on, use the equipment in another location and/or utilize an electrical outlet different from that used by the receiver. If necessary, consult the dealer or an experienced radio/TV technician for help. You may find the booklet, 'Something About Interference' available from FCC local regional offices helpful.

This product utilizes both a Cathode Ray Tube (CRT) and other components that contain lead. Disposal of these materials may be regulated in your community due to environmental considerations. For disposal or recycling information please contact your local authorities, or the Electronics Industries Alliance: <http://www.eiae.org.>

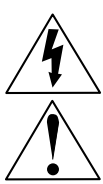

This symbol warns the user that uninsulated voltage within the unit may have sufficient magnitude to cause electric shock. Therefore, it is dangerous to make any kind of contact with any inside part of this unit.

This symbol alerts the user that important literature concerning the operation and maintenance of this unit has been included. Therefore, it should be read carefully in order to avoid any problems.

Region Management Information

Region Management Information: This unit is designed and manufactured to respond to the Region Management Information that is recorded on a DVD disc. If the Region number described on the DVD disc does not correspond to the Region number of this unit, this unit cannot play this disc.

The Region number for this unit is 1.

Congratulations

on your purchase of one of the most sophisticated and reliable products on the market today. Used properly, it will bring you and your family years of enjoyment. Please fill in the information below. The serial number is on the tag located on the back of your unit.

Date of Purchase _____
Dealer Purchased From _____
Dealer Address _____
Dealer Phone No. _____
Model No. **AG-527DVDE**
Serial No. _____

Accessories

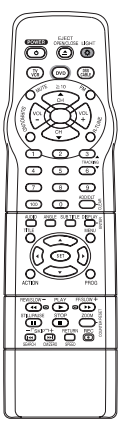

☐ Remote Control
LSSQ0302

☐ Batteries 2 "AA"

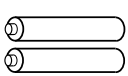

Loading the Batteries

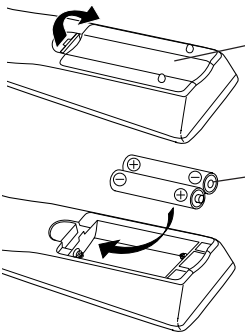

☐ **Battery replacement caution**
- Do not mix old and new batteries.
- Do not mix alkaline with manganese batteries.

Prevent Accidental Tape Erasure

Break off the tab to protect.

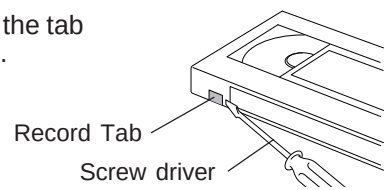

To record again.

Cover the hole with cellophane tape.

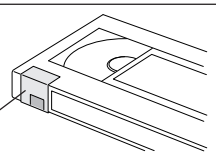

Record/Playback Time

Only use tapes with the VHS mark in this unit.

Tape Speed Setting	Type of Video Cassette		
	T60	T120	T160
SP (Standard Play)	1 Hour	2 Hours	2 Hours 40 Minutes
LP (Long Play)	2 Hours	4 Hours	5 Hours 20 Minutes
SLP (Super Long Play)	3 Hours	6 Hours	8 Hours

Table of Contents

Initial Setup

TV / VCR

Important Safeguards and Precautions / Safety Precautions ..... 2 - 3
Before Using 4
Information (Unit, Cassette, Disc) ..... 6 - 7
Location of Controls ..... 8 - 11
Connections ..... 11 - 13
Initial Setup 14, 15
Reset Language, Channels, Clock, Time Zone Adjust 16, 17

Basic Operation

TV / VCR

Playback a Tape 18
Record On a Tape 18
Copy Your Tapes (Dubbing) 19

DVD

Basic DVD Operation 20, 21

TV Operation

TV / VCR

TV Operation 22
MTS Broadcast / TV Stereo System 23
Closed Caption System 24, 25
TV Timer Features 26
On-Screen Display (OSD) 27
FM Radio 28, 29

Timer Operation

TV / VCR

Timer Recording 30, 31

Advanced Operation

TV / VCR

Cable Box Universal Remote Control Feature 32, 33
Tape Operation ..... 34 - 37
Special VCR Features 38, 39
V-Chip Control Feature ..... 40 - 43
Audio Features 44, 45
Video / Audio Menu 46
Video / Audio Adjustment 47

DVD

Disc Operation ..... 48 - 52
DVD Operation using On-Screen Displays ..... 53 - 55
MP3 Playback Operation 56
DVD Lock Feature 57

For Your Information

DVD

Settings for DVD Operation ..... 58 - 60
Language Code List 61

TV / VCR

Before Requesting Service 62, 63
Warning and Instruction Displays 64, 65
Index 66, 67

Information (Unit, Cassette, Disc)

Head Cleaning

Playing older or damaged tapes may eventually cause video heads to become clogged.

Head Clog Sensor

During playback this screen appears if clogging is detected. To remove screen, press PLAY on the remote or unit.

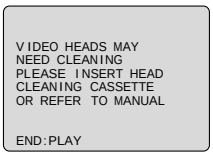

- **Use "dry" type head cleaning cassette only.** (Part No. NV-TCL30PT is recommended.)
- Follow cleaning tape directions carefully. Excessive use of head cleaning tape can shorten the video head life.

DST (Daylight Saving Time)

Unit auto adjusts clock for DST (Daylight Saving Time.)

■ **Spring (First Sunday in April)**
DST : ON ➔ Sets clock ahead one hour.

■ **Autumn (Last Sunday in October)**
DST : ON ➔ Turns clock back one hour.

- If your area does not observe Daylight Saving Time, select DST : OFF (see "Clock" on pages 16 and 17).
- Keep these time changes in mind when programming the unit for timer recordings.

Features for a Quality Picture

Digital Auto Tracking
Continuously analyzes the signal and adjusts for optimum picture quality.

Manual Tracking Control (to reduce picture noise)
Use during Playback and Slow Motion mode to reduce picture noise. Press the 3 or 6 number key on the remote control or CH ▲▼ on the unit until the picture clears up. To return to Auto Tracking, press POWER off, then on again a few seconds later.

V-Lock Control
In Still mode, the 3 or 6 number key on the remote control or CH ▲▼ on the unit operate as a V-Lock control to reduce jitter.

PanaBlack™ Picture Tube
This unit uses a PanaBlack™ picture tube for better colour reproduction and picture contrast.

Specifications

Display
Picture Tube: 27 inch measured diagonal 100° deflection Picture Tube

VCR
Video Recording System: 4 rotary heads helical scanning system
Audio Track: 1 track (Normal) 2 channel (Hi-Fi Audio Sound)

Tuner
Broadcast Channels: VHF 2 ~ 13, UHF 14 ~ 69
CABLE Channels: Midband A through I (14 ~ 22)
Superband J through W (23 ~ 36)
Hyperband AA ~ EEE (37 ~ 64)
Lowband A-5 ~ A-1 (95 ~ 99)
Special CABLE channel 5A (01)
Ultraband 65 ~ 94, 100 ~ 125

FM Radio
Band range: 87.5 ~ 108.1 MHz

General
Power Source: 120V AC, 60 Hz
Power Consumption: Power On
Approx. 170 watts
Power Off
Approx. 3.5 watts
Television System: EIA Standard NTSC color
Speaker: 2 pieces
Operating Temperature: 5 °C ~ 35 °C (41 °F ~ 95 °F)
Operating Humidity: 10 % ~ 75%
Weight: 42 kg (92.4 lbs.)
Dimensions: 772(W) x 654 (H) x 550 (D) mm
30-3/8" (W) x 25-3/4" (H) x 21" (D)

Discs played
(1) DVD-VIDEO disc
5" (12 cm) single-sided, single-layer
5" (12 cm) single-sided, double-layer
5" (12 cm) double-sided, double-layer (one layer per side)
3" (8 cm) single-sided, single-layer
3" (8 cm) single-sided, double-layer
3" (8 cm) double-sided, double-layer (one layer per side)
(2) Compact disc (CD-DA, VIDEO CD) 5" (12 cm) disc, 3" (8 cm) disc
(3) MP3

Digital audio output:
Optical digital output: Optical connector
Pickup: Wavelength:
655 nm (DVD)
790 nm (Video CD/CD)
Laser power: CLASS II

Note : Designs and specifications are subject to change without notice.

Disc formats supported by this unit

The unit can play back discs bearing any of the following marks:

DVD
3" (8 cm) disc / 5" (12 cm) disc

Video CD
3" (8 cm) disc / 5" (12 cm) disc

CD
3" (8 cm) disc / 5" (12 cm) disc

MP3

Discs which cannot be played with this unit

- DVD with Region No. other than "1" or "ALL"
- DVD of PAL system
- DVD-RAM
- DVD-ROM
- CD-ROM
- CDV
- CD-G
- **Do not try to play a Photo CD.**

is a registered trademark.

Definition of Terms

Angle
Some DVD discs feature scenes simultaneously shot from different angles. The ANGLE button can be used to view the scene from different angles. (ANGLE Indicator lights up on the unit when a scene recorded at different angles is detected.)

Chapter Number
Titles are subdivided into numbered sections. You can quickly search for a favorite scene using these numbers.

DVD
A high-density optical disc on which high-quality pictures and sound have been digitally recorded. DVD incorporates new video compression technology (MPEG II) and high-density recording technology which allow entire movies to be recorded with incredible playback quality.

Playback Control
With Video CD (version 2.0), scenes or information may be selected for viewing or listening from an interactive menu that appears on the TV screen.

Subtitles
Written dialogue which appears at the bottom of the screen.

Time Number
The elapsed play time from the start of a disc or title. Use to quickly find scenes. (May not work with some discs.)

Title Number
For DVD discs with two or more titles, the title is numbered as title 1, title 2, etc.

Track Number
Numbers assigned to tracks on Video CDs and CDs to allow specific tracks to be quickly located.

Video CD
CD containing picture and sound with same quality level as video tape. This unit also supports Video CDs with playback control (version 2.0).

Disc Handling

Handling precautions

- Only hold disc by edges as shown. Fingerprints, dirt, and scratches can cause skipping and distortion.
- Do not write on label side of disc.
- Never use record cleaning sprays, benzine, thinner, static electricity prevention liquids, or any other solvent.
- Be careful not to drop or bend disc.
- Do not place more than 1 disc on disc tray.
- Do not try to close disc tray when disc is not properly placed.
- Always store discs in their proper cases when not in use.

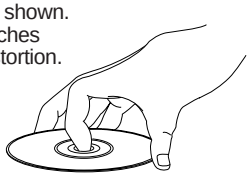

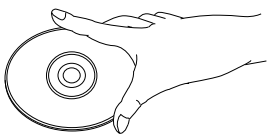

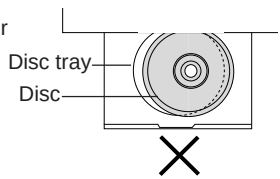

To clean disc surface

With a soft, damp (water only) cloth, gently wipe from the center hole to the outer edge as shown below. (Wiping in a circular pattern will scratch the surface.)

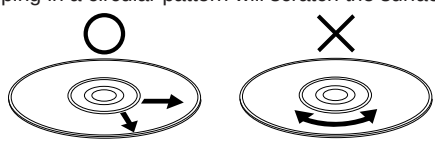

If disc is brought from a cold to a warm environment, moisture may form on the disc

Wipe away moisture with a soft, dry, lint-free cloth before using disc. (See above.)

Improper disc storage

Discs could be damaged if stored or left in areas:

- exposed to direct sunlight.
- that are humid or dusty.
- near heat (i.e. heater, radiator, etc.).

Apparatus Claims of U.S. Patent Nos. 4,631,603, 4,577,216, and 4,819,098, licensed for limited viewing uses only.

This product incorporates copyright protection technology that is protected by method claims of certain U.S. Patents and other intellectual property rights owned by Macrovision Corporation and other rights owners. Use of this copyright protection technology must be authorized by Macrovision Corporation, and is intended for home and other limited viewing uses only unless otherwise authorized by Macrovision Corporation. Reverse engineering or disassembly is prohibited.

Location of Controls

Remote Control Buttons

EJECT/OPEN/CLOSE
See next page.

POWER
Turns the unit on or off.

TV/VCR
Sets to TV/VCR mode.

MUTE
Mutes the sound instantly.

CHANNEL UP/DOWN
Selects a channel.

SURROUND
Creates a deeper, 3-D sound effect.

NUMBER Keys
Selects a channel directly.

ANGLE
Selects the desired angle in DVD mode.

AUDIO
Selects the desired audio mode.

TITLE
Selects the desired title by number on some DVDs.

SELECT ▲▼◀▶
Controls navigation around on-screen menu.

ACTION
Displays Main Menu.

SET
Sets a selected menu.

REW/SLOW-
Rewinds tape and searches reverse scene. Decreases slow motion speed in Still mode.

STILL/PAUSE
Pauses picture in Play mode and frame advance picture in Still mode.

SKIP⏮/SEARCH
Skips back one chapter or track. Goes to previous menu screen. Goes directly to the desired recording. Locates end point of recording.

PLAY
Begins playback.

SKIP⏭/CM SKIP/ZERO SEARCH
Skips one chapter or track. Goes to next screen. In Stop mode, goes to the counter "0:00:00". In Play mode, skips over 1 to 3 minutes of tape.

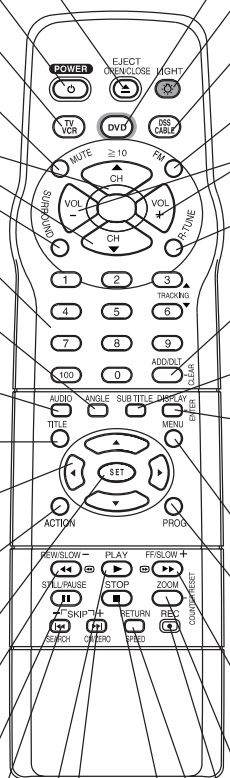

DVD
Sets to DVD mode.

LIGHT
See next page.

DSS/CABLE
Sets the remote to control some basic DDS or Cable box functions.

FM
Receives FM radio signal.

VOLUME UP/DOWN
Adjusts volume.

RAPID TUNE
Displays the last channel you were watching.

ADD/DELETE/CLEAR
Adds or deletes a channel. Cancels an item on the screen.

SUB TITLE
Selects a different subtitle language.

DISPLAY/ENTER
Displays the TV status and clock. In DVD mode, displays disc and unit information.
In DSS or CABLE mode, it may be necessary after channel selection.

MENU
Displays DVD menu.

PROGRAM
Displays SET PROGRAM screen. You can set Timer Program and On-Timer.

FF/SLOW+
Fast forwards tape and forward visual search. Increases slow motion speed in Still mode.

ZOOM/COUNTER RESET
Enlarges specific portions of DVD picture. Resets to "0:00:00" at desired portion of tape.

REC
Records a program.

RETURN/SPEED
Returns to DVD menu screen. Selects recording speed of tape.

STOP
Stops recording or playback.

Universal Light Tower® Illuminated Remote Control

LIGHT button:
When LIGHT is pressed, (DVD, TV/VCR, DSS/CABLE, CH UP/DOWN, VOL UP/DOWN) buttons will light for 5 seconds for easy button location.
If no button is pressed in 5 seconds, the light goes out to conserve the batteries.

EJECT/OPEN/CLOSE button:
When this button is pressed in TV-VCR mode, the tape is ejected.
This button is inoperative if pressed during recording.
If pressed in DVD mode, the disc tray opens or closes.

Indicators on the Front Panel

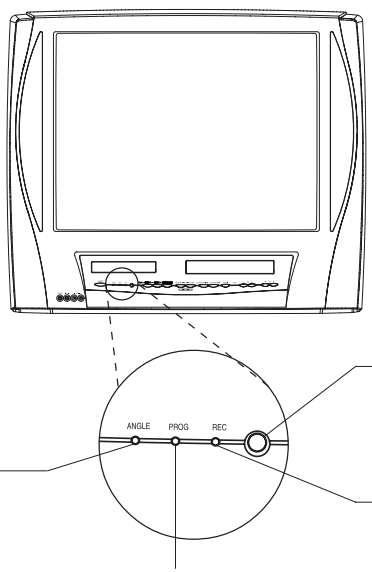

Remote Sensor

ANGLE Indicator
Lights up when a scene recorded at a different angles is detected. (DVD only).
Pg. 49

REC Indicator
Lights up during recording. In Rec Pause or OTR Pause mode, the Indicator flashes.
Pg. 18

PROG TIMER Indicator
Lights up when the unit is set for Timer Recording. It flashes when a Timer Recording has been set with no tape inserted, the clock is not set, or the tape is in motion.
Pg. 30
Lights up when the On Timer is set.
Pg. 26

Location of Controls (continued)

Front View of the unit

If the disc cannot be removed...
First, unplug unit.
Then, prepare a rigid wire (e.g. an extended paper clip) and, applying moderate force, insert it straight into the hole at the base of the tray. The tray will eject a little. Now, pull the tray all the way out and remove the disc.

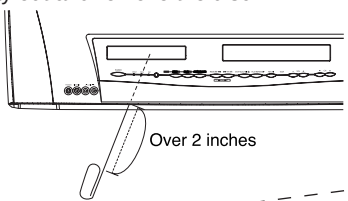

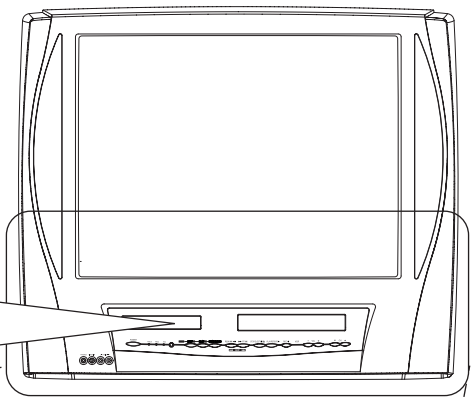

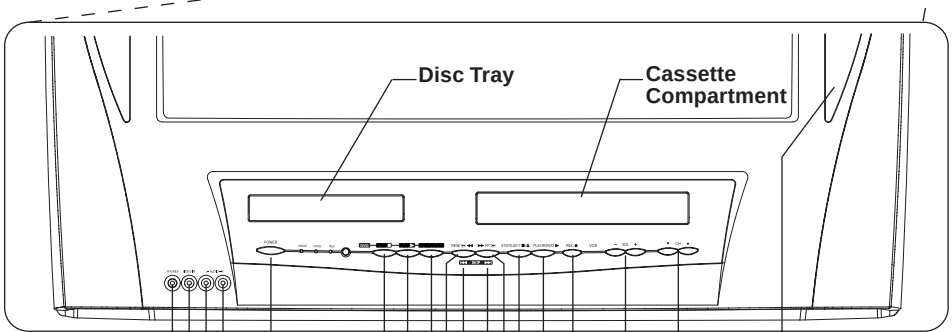

PHONES
Connect an earphone or headphones.

AUDIO/VIDEO IN Connector
Connect from other component.

POWER (See page 8.)

STOP (See page 8.)

PLAY (See page 8.)

OPEN/CLOSE (See page 8.)

REWIND/SEARCH (See page 8.)

SKIP⏮ (See page 8.)

SKIP⏭ (See page 8.)

Built-In SpeakerX2

CHANNEL UP/DOWN
(See page 8.)
TRACKING UP/DOWN
(See page 8.)

VOLUME UP/DOWN
(See page 8.)

REC
(See page 8.)

PLAY/REPEAT
(See page 8.)

STOP/EJECT
(See page 8.)

FAST FORWARD/ SEARCH
(See page 8.)

Rear View of the unit

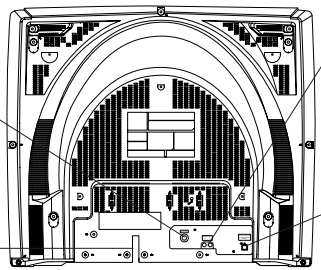

Audio Output Connector (L/R)
Pg. 12

VHF/UHF Antenna Input Terminal
See below.

Optical digital audio output connector
Pg. 13

AC Power Plug
When plugged into an AC outlet, this unit consumes 3.5 W of electric power in OFF condition.

Connections

For ANT./Cable

Connect the cable from Antenna/Cable to the VHF/UHF terminal on the unit.

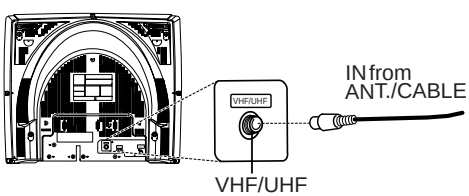

For DSS/Cable Box

Connect the OUT jack on your cable box to the VHF/UHF terminal on the unit with a RF cable.

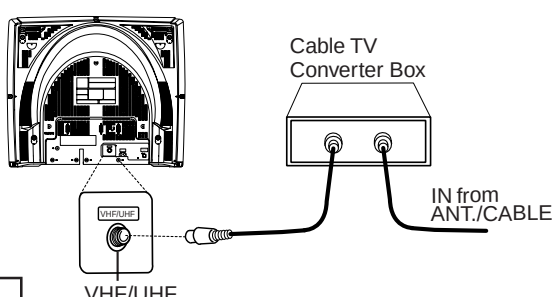

WARNING
Overtightening “Nut type” RF coaxial cables may damage jacks. Finger tighten only.

Connections (continued)

Audio connections

■ Unit ➛ Amplifier ➛ Speaker

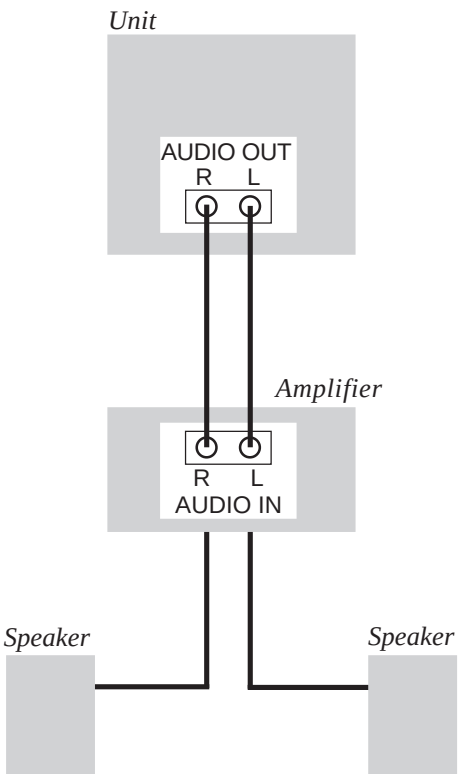

Manufactured under license from Dolby Laboratories. “Dolby”, “Pro Logic” and the double-D symbol are trademarks of Dolby Laboratories. Confidential Unpublished Works. © 1992-1997 Dolby Laboratories, Inc. All rights reserved.

Ready Checklist

- ☐ Turn down the volume, then turn this unit, as well as other equipment to be connected, off before proceeding with connection.
- ☐ Do not block ventilation holes of any of the equipment and arrange them so that air can circulate freely.
- ☐ Read through the instructions before connecting other equipment.
- ☐ Ensure that you observe the color coding when connecting audio and video cables.

Enjoying digital audio output from the digital audio output connector

Notes on audio output from the optical digital audio output connector

Disc	Sound recording format	Optical digital audio output from connector
DVD	Dolby Digital	Dolby Digital bitstream (1-5.1 ch) or OFF (no output)*1
	Linear PCM (48/96 kHz 16/20/24 bit)	Linear PCM (2ch) (48 kHz sampling/16 bit only)*2 or no output*1
	dts	Bitstream or no output*1
Video CD	MPEG 1	PCM (44.1 kHz sampling)
CD	Linear PCM	Linear PCM (44.1 kHz sampling)
MP3	MP3	Linear PCM (It depends on the MP3 file)

*1 The type of audio output from the connector can be selected by the Settings for DVD Operation. (See page 59.)

*2 Sound having 96 kHz sampling is converted into 48 kHz sampling when it is output from the unit’s optical digital audio output connector.

For your reference:

- Dolby Digital is a digital sound compression technique developed by the Dolby Laboratories Licensing Corporation. Supporting 5.1-channel surround sound, as well as stereo (2-channel) sound, this technique enables a large quantity of sound data to be efficiently recorded on a disc.
- Linear PCM is a signal recording format used in CDs. While CDs are recorded in 44.1 kHz/16 bit, DVDs are recorded in 48 kHz/16 bit up to 96 kHz/24 bit.
- If you have a Dolby Pro Logic Surround decoder, you will obtain the full benefit of Pro Logic from the same DVD movies that provide full 5.1 channel Dolby Digital soundtracks, as well as from titles with the Dolby Surround mark. For information on Panasonic or Technics Dolby Pro Logic Surround Sound Decoders please contact your local dealer.

■ Unit ➛ Dolby Digital Decoder ➛ Amplifier ➛ Speaker
or
Unit ➛ dts (digital theater systems) Decoder ➛ Amplifier ➛ Speaker

When DVDs recorded in Dolby Digital or dts are played, Dolby Digital bitstream or dts bitstream is output from the unit Optical digital audio output connector. When the unit is connected to a Dolby Digital decoder or dts decoder, you can enjoy theater-quality audio in your home. [An optical digital audio cable (optional) is required when an optional Dolby Digital decoder or dts decoder is used.]

Notes on connecting an Optical digital audio cable (optional)

- Firmly connect the cable to the connector.

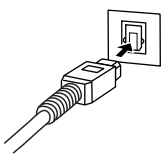

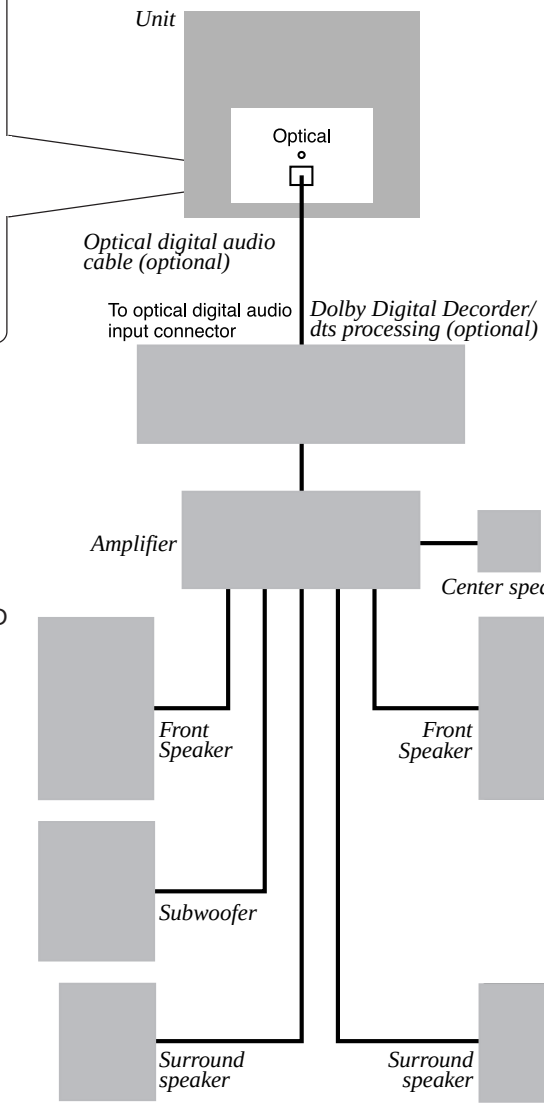

IMPORTANT NOTE:
Caution for optical digital audio output connector:

- When connecting an amplifier (with an Optical digital input connector) which does not contain the Dolby Digital or dts decoder, be sure to select “OFF” at “Dolby Digital” and “OFF” at “dts” of the Settings for DVD Operation “AUDIO OUTPUT” (see page 59). Otherwise, any attempt to play DVDs may cause such a high level of noise that it may be harmful to your ears and damage your speakers.
- When a dts decoder is connected, please select “Bitstream” at “dts” of the Settings for DVD Operation “AUDIO OUTPUT”. If “OFF” is selected, there will be no sound. (See page 59).
- Video CDs and CDs can be played as normal.

Note:

- Some dts decoders which do not support DVD-dts Interface may not work properly with the unit.

Initial Setup (Ready to Play)

Please make all cable or antenna connections before powering on.

Initial Setup (Ready to Play)

Press TV/VCR on the remote for TV-VCR mode.

1 Plug the unit power cord into an AC wall outlet.

2 Press POWER* on the remote or unit. The unit comes on and auto channel and clock set starts.

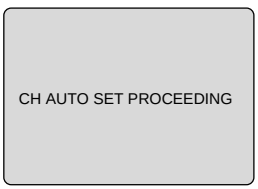

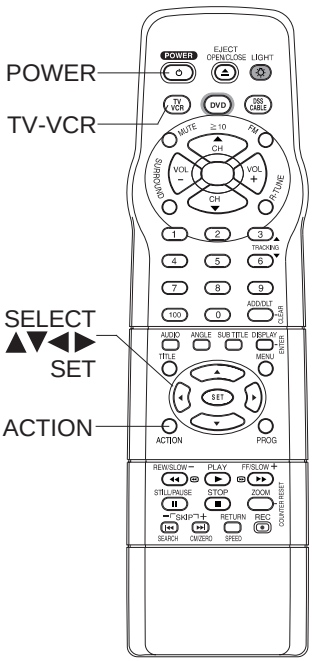

- If you use a cable box, turn it on and set it to the Public Broadcasting Service (PBS) channel in your time zone. If you use a DSS receiver, it must be turned off.

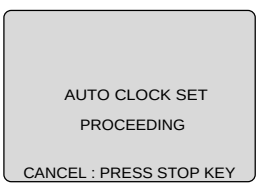

3 Settings are made automatically. When setup is done, this screen appears.

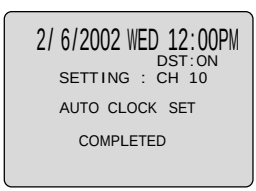

If AUTO CLOCK SET IS INCOMPLETE screen appears, set the clock using MANUAL CLOCK SET procedure on next page.

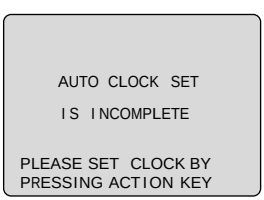

*Important: If a remote control button does not work when pressed, press the TV/VCR button on the remote and try the button again.

Manual Clock Set

If AUTO CLOCK SET was incomplete, manually set the clock as follows.

1 **Press ACTION** on the Remote to display SET CLOCK Menu screen.

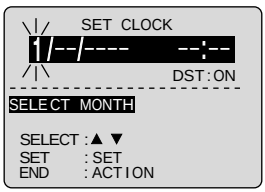

2 **Press ▲▼** to select the month and **press SET** to set. In the same manner, select and set the date, year, time, and DST. (Daylight Saving Time)

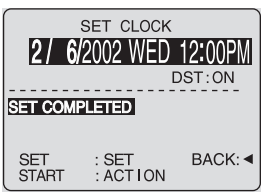

3 **Press ACTION** twice to start CLOCK and exit.

Reset all unit Memory Functions

When moving unit to a new location, or if a mistake was made in the Initial Setup section.
• Make sure a tape is not inserted in the unit.

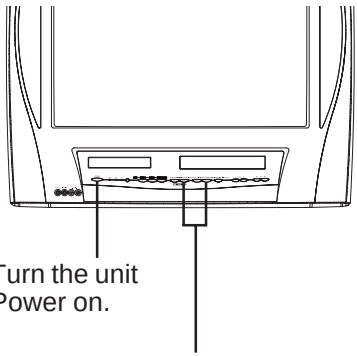

1 Turn the unit Power on.

2 Press and hold both **PLAY** and **FF** on the unit for more than 5 seconds.
• The power will shut off.
• Please ignore “NO CASSETTE” warning.

3 Perform “Initial Setup” on page 14.

Note to CABLE system installer:
This reminder is provided to call the CABLE (Cable TV) System Installers attention to Article 820-40 of the NEC that provides guidelines for proper grounding and, in particular, specifies that the cable ground shall be connected to the grounding system of the building, as close to the point of cable entry as practical.

Reset Language, Channels, Clock,

1

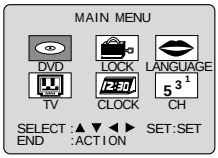

Press ACTION*
to display MAIN MENU.

2

■ Language

1) **Press ▲▼◄►** to select language icon.

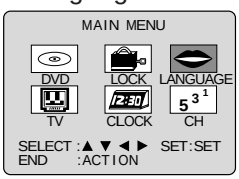

2) **Press SET** repeatedly.

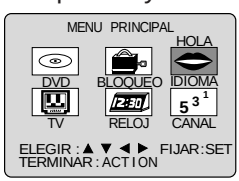

For Spanish

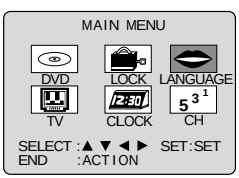

For French

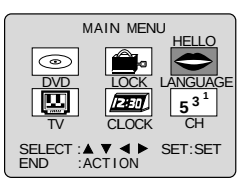

For English

3) **Press ACTION** to exit.

■ Channels

1) **Press ▲▼◄►** to select “CH.”

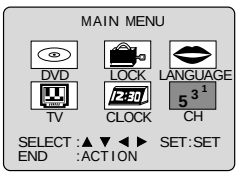

2) **Press SET.**

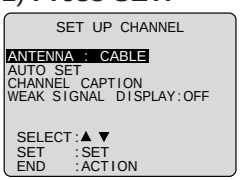

3) **Press ▲▼** to select “ANTENNA,” then **press SET** to set your antenna system (“TV” or “CABLE”).

4) **Press ▲▼** to select “AUTO SET,” then **press SET**.

- After Channel Auto Set is finished, Clock Auto Set will be performed. (If clock is set manually, Clock Auto Set will not be performed.)

■ Clock

1) **Press ▲▼◄►** to select “CLOCK.”

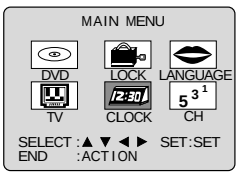

2) **Press SET**.

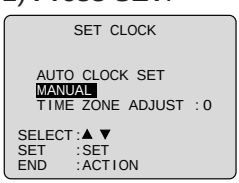

(“TIME ZONE ADJUST” appears only when auto clock is set.)

3) **Press ▲▼** to select “MANUAL,” then **press SET**.

(For Auto Clock Set, select “AUTO CLOCK SET,” and **press SET**.)

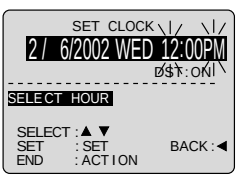

<Example MANUAL CLOCK SET screen>

Continued on the next page.

Time Zone Adjust

***Important:** If a remote control button does not work when pressed, press the TV/VCR button on the remote and try the button again.

4) **Press ▲▼** and **press SET** to select and set the month, date, year, time, and DST (Daylight Saving Time).

To Make Corrections, repeatedly press ◀▶ to move to error, then correct.

5) **Press ACTION** twice to start the clock and exit this mode.

■ Time Zone Adjust

(Only when Auto Clock is set.)

1) **Press ▲▼◀▶** to select "CLOCK."

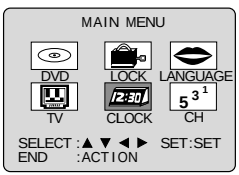

2) **Press SET**.

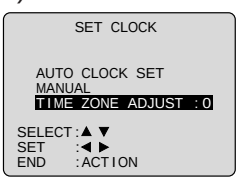

3) **Press ▲▼** to select "TIME ZONE ADJUST" and **press ◀** or **▶** to subtract or add hour(s) as necessary.

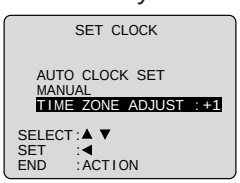

4) **Press ACTION** twice to exit.

- "TIME ZONE ADJUST" returns to "0" if clock is set manually.

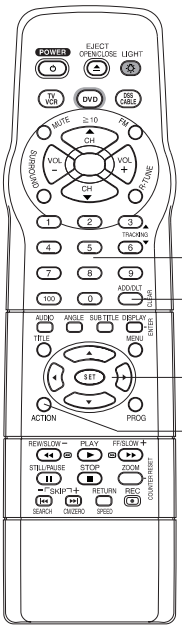

Add or Delete a Channel

To add channel:
Select channel with **number keys** and **press ADD/DLT**.

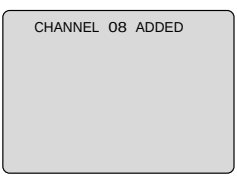

To delete channel:
Select channel with CH ▲▼ or **number keys** and **press ADD/DLT**.

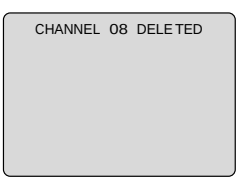

Playback a Tape

Ready Checklist

☐ All connections are made.
☐ Your unit is plugged in.

1 **Insert a tape.**

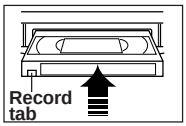

- The unit power comes on automatically.

To prevent tape jam, remove loose or peeling labels from tapes.

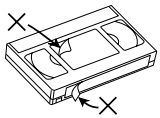

2 **Press PLAY*** to play a tape.

- If tape has no record tab (see page 4), auto play begins.

■ **Forward/Reverse scene search**
➛ **Press FF/SLOW+** or **REW/SLOW-**.
➛ **Press** again or **PLAY** to release.

■ **Still (Freeze) picture**
➛ **Press STILL/PAUSE**.
➛ **Press PLAY** to release.

■ **Slow Motion picture**
➛ **Press FF/SLOW+** (increases speed) or **REW/SLOW-** (decreases speed) in Still mode.
➛ **Press PLAY** to release.

■ **Frame by Frame picture**
➛ **Press STILL/PAUSE** in Still mode.
➛ **Press PLAY** to release.

Notes

- These features work best in SP or SLP mode.
- After the unit is in Still or Slow mode for 3 minutes, it will switch to Stop mode automatically to protect the tape and the video head.

■ **Stop ➛ Press STOP**
■ **Rewind tape ➛ Press REW/SLOW-** in Stop mode
■ **Fast forward tape ➛ Press FF/SLOW+** in Stop mode
■ **Eject tape ➛ Press EJECT** on the remote or **STOP/EJECT** on the unit

Operation using unit buttons

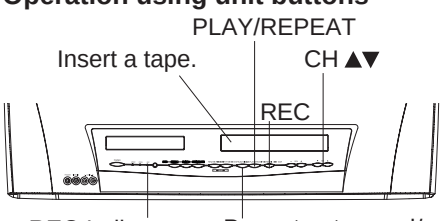

Record On a Tape

1 **Insert a tape with record tab.**

- The unit power comes on automatically.

2 **Press CH ▲▼** or **number keys** to Select Channel.

- For "LINE" input, see bottom of next page.

3 **Press SPEED** to select recording speed (see page 4).
SP = Standard Play
LP = Long Play
SLP = Super Long Play

- Selected speed is displayed.

4 **Press REC** to start recording.

- To edit out unwanted portions, **press STILL/PAUSE** to pause and resume recording.
- You cannot view another channel during recording.

■ **Stop ➛ Press STOP**
■ **One Touch Recording (OTR)**
Press REC repeatedly to set the recording length (30 min - 4 hours.)

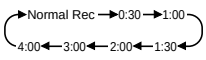

- The unit stops recording at a preset time.
- PROG TIMER Indicator lights on the unit.

Notes

- **It is not possible to record from DVD/ Video CD/CD to VHS tape using this unit.**
- After the unit has been in Rec Pause mode for 5 minutes, it will stop automatically to protect the tape and the video head.
- The remaining recording time of an OTR can be displayed by pressing DISPLAY.

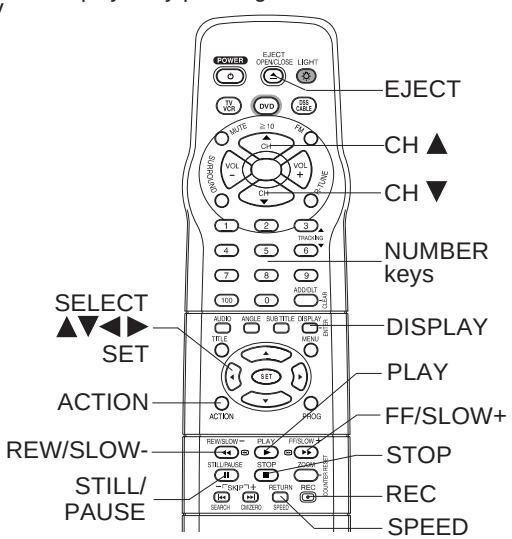

Copy Your Tapes (Dubbing)

***Important:** If a remote control button does not work when pressed, press the TV/VCR button on the remote and try the button again.

Connections you'll need to make

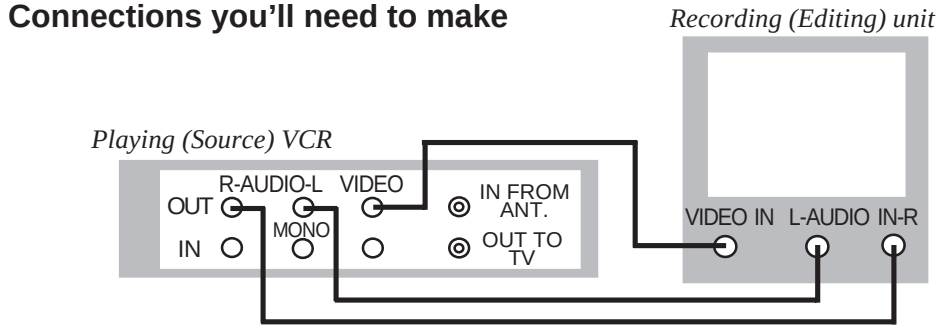

Playback (Source)

1 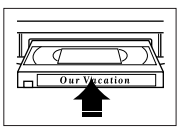

Insert pre-recorded tape.

2 ———————

3

Press PLAY then **PAUSE** at starting point to put in Standby mode.

Recording (Editing) unit

1 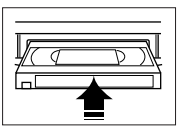

Insert blank tape with record tab.

- Dubbing tapes protected with Copy Guard will have poor quality results.

2

Select "LINE" mode.
See "Selecting Input Mode" below.

3

Press REC, then **Press STILL/PAUSE** immediately to put in Standby mode.

— (Perform operation of steps 4 and 5 on both units at same time.) —

4 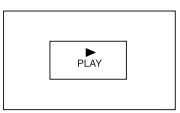

Press PLAY to start dubbing.

Press STILL/PAUSE to start dubbing.

5 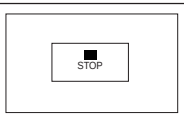

Press STOP to stop dubbing.

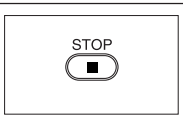

Press STOP to stop dubbing.

Caution

- Unauthorized exchanging and/or copying of copyrighted recordings may be copyright infringement.
- Please note that some tapes cannot be dubbed on this unit. Also, it is not possible to dub DVD/Video CD/CD to VHS tape using this unit.

Selecting Input Mode

Method 1:
Press CH ▲▼. The display will change as follows.

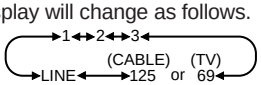

Method 2:
a Press ACTION for MAIN MENU.
b Press ▲▼◄► to select "TV", then **press SET** for SET UP TV screen.
c Press ▲▼ to select "INPUT SELECT," and then **press SET** to select "TUNER" or "LINE."
d Press ACTION twice to exit this mode.

Basic DVD Operation

Ready Checklist

- ☐ All connections are made. (See pages 11-13.)
- ☐ Your unit is plugged in.
- ☐ If unit is connected to an audio amplifier, turn the stereo system's power on.

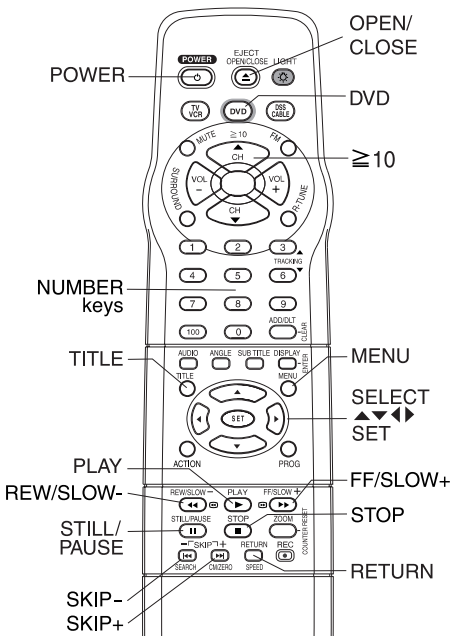

Operation using unit buttons

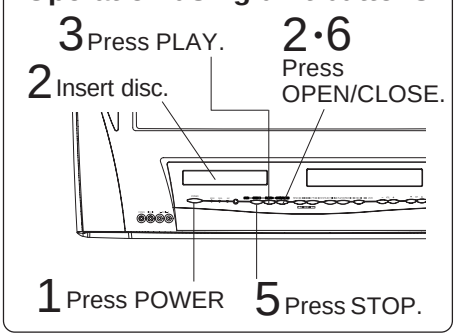

*1 Interactive DVD...
May include multiple camera angles, stories, etc.

*2 Video CD with playback control...
Particular scenes or information can be interactively selected from a menu that appears on the screen.

1 Press POWER* on the remote or unit.

2 Insert a disc.

- If a disc is already inserted, go to step 3. (Depending on the disc, playback may start automatically.)

1) **Press OPEN/CLOSE**.
2) Place disc into disc tray.

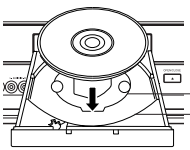

- Hold disc by its edges only (page 7) with printed side up and use guides to place into tray. Use ❶ 3"(8 cm) or ❷ 5" (12 cm) disc.

3 Press PLAY to start play.

Disc tray closes automatically.

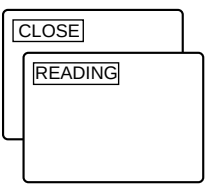

- You may also close the tray by **pressing OPEN/CLOSE**.
- Data reading time differs with each disc.

<Example>

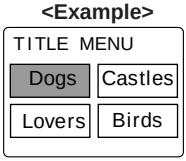

If an interactive DVD*1 or a Video CD with playback control*2 is used and a TITLE MENU appears, go to step 4.

4

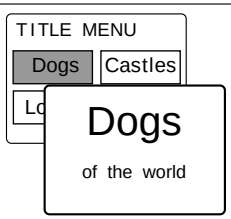

Press ▲▼◀▶ or **number key(s)** (see below) to select title and **press SET** to play.

Using number key(s) starts play automatically.

<Example>

<Example> 1 digit number 1 ••• 1
2 digit number 12 ••• ≧10➝1➝2
3 digit number 123 •••100➝1➝2➝3

Press SKIP ▶▶| or |◀◀ to go to next or previous menu screen.

- SKIP function not available with all discs. Please refer to disc jacket for operation information.

To return to MENU (play stops)
Press TITLE, **MENU**, or **RETURN**. (DVD)
Press RETURN. (Video CD)

5 Press STOP to stop play.

6 Press OPEN/CLOSE to eject the disc.

■ Forward/Reverse rapid scene search

➛ **Press FF/SLOW+** or **REW/SLOW-** during play.

➛ **Press PLAY** to release.

- Starting forward/reverse search during play started from menu on Video CDs may recall menu.
- Search speed, slow at first, increases with each additional press of the button up to 5 levels.

■ Forward/Reverse Chapter/Track Skip

➛ **Press SKIP ▶▶|** or **|◀◀** during play.

Each **press skips** a chapter (DVD) or track (Video CD/CD).

Pressing |◀◀ SKIP once midway through a chapter/track returns to start of that chapter/track. Each additional press skips back one chapter/track.

- **Pressing SKIP ▶▶|** or **|◀◀** during play started from menu on Video CDs may recall menu.

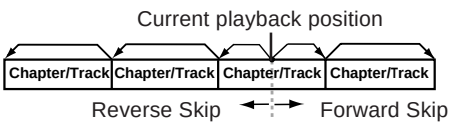

■ Still (Pause) Picture

➛ **Press STILL/PAUSE** during play.

➛ **Press PLAY** to release.

- **DVD/Video CD :** The unit will enter Still picture mode.
- **CD :** The unit will enter Pause mode.

■ Frame by Frame picture (DVD/Video CD)

➛ **Press STILL/PAUSE** in Still mode.

➛ **Press PLAY** to release.

- Each press advances picture one frame.
- Hold down for consecutive frame advance.
- Whether pictures are advanced by “FRAME” or “FIELD” is selected automatically (see page 60).

■ Slow Motion picture (DVD/Video CD)

➛ **Press FF/SLOW+** or **REW/SLOW-** (DVD only) in Still mode.

➛ **Press PLAY** to release.

- Slow motion speed, slow at first, is increased with each additional press of the button up to 5 levels.
- Reverse slow motion is not available for video CDs.

- When ⃠ appears on the screen while a button is being pressed, it means that the corresponding operation is prohibited by the unit or the disc.

RESUME function

The unit memorizes the point where STOP is pressed (▶ flashes on screen).
Press PLAY to resume play from this point.
Pressing STOP again or opening the tray cancels RESUME, however, RESUME is not canceled when power is turned off and on.

- RESUME works only with discs for which elapsed play time is displayed during play.

Auto-Power Off function

Power turns off after unit has been in Stop mode (DVD) for about 5 minutes.

Enjoy Video CDs featuring playback control without using menus (Video CDs only)

1. Do steps 1-3 (previous page). When menu appears, **press STOP**.
2. **Press number key(s)** to select desired track (play begins).
   - Check disc for track numbers.
   - Press “1” to start at beginning of disc.

To Resume Menu use,
Press STOP, and **press PLAY**, then the menu appears. Now, go to step 4 (previous page).

Notes

- Please read the disc jacket for operation information.
- If a single sided disc is placed in upside down, “PLEASE CHECK THE DISC, AND FOR STAINS OR SCRATCHES ON DISC” is displayed.
- Remove disc and press unit POWER off when not in use.
- Disc continues to rotate with menu displayed even after play is done. Press STOP to clear menu display when finished with menu.

TV Operation

*Important: If a remote control button does not work when pressed, press the TV/VCR button on the remote and try the button again.

1 Press POWER* on the remote or unit.

Ready Checklist

☐ All connections are made. (See page 11).
☐ Your unit is plugged in.

2

Use CH ▲▼ or **number keys** to select a channel.

3

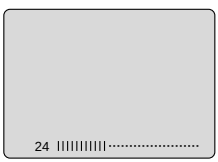

Press VOL + or **VOL -** to adjust volume.

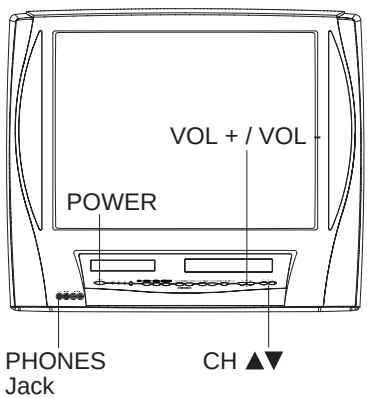

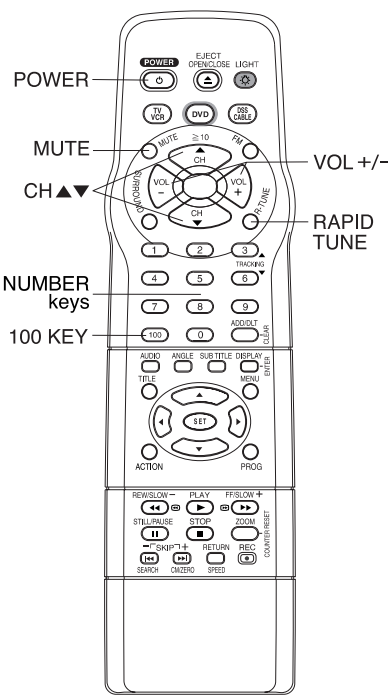

■ Using the 100 key

When selecting CABLE channels 100 to 125 with the number keys, first press the 100 key, and then enter the remaining two digits.

■ Rapid Tune

Press R-TUNE to display the last channel you were watching.

■ Audio Mute

Press MUTE to instantly mute the sound.
Press again to restore the previous sound level.

■ Phones

Connect an earphone (not supplied) or headphones (not supplied) to the Phones Jack.

MTS Broadcast/TV Stereo System

Equipped with dbx® -TV Noise Reduction for true MTS reproduction. dbx® -TV Noise Reduction is required for good stereo separation and audio fidelity. dbx® is a registered trademark, and is licensed by dbx® Technology Licensing.

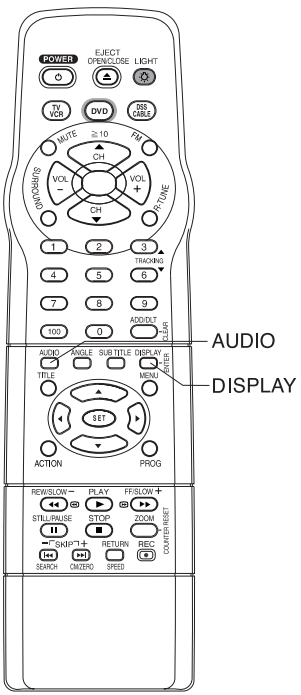

Receivable Broadcast Types

The following are possible audio broadcast types and on-screen displays. The signal being received is indicated with an " ((" mark while the selected audio mode is indicated with an arrow. To change the audio mode for these broadcasts, see the "Select Audio Mode for TV Viewing" section (below.)

Press DISPLAY to display the broadcast signal being received.

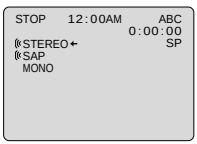

MTS Stereo and SAP broadcast
Multi-channel Television Sound Stereo (main language) and Secondary Audio Program (sub language) broadcasts are being received simultaneously.
Select the STEREO or SAP audio mode.

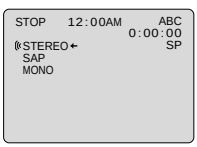

MTS Stereo broadcast
Multi-channel Television Sound Stereo broadcast. Select STEREO audio mode.
- If stereo broadcast is weak and the display flickers, select MONO audio mode for possible improvement.

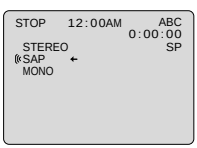

SAP broadcast
Secondary Audio Program (sub language).
Select SAP audio mode for the sub language.

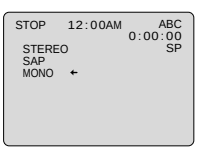

MONO broadcast
Normal monaural sound broadcast.

Audio Mode for TV Viewing

Press AUDIO to select the desired audio mode as described above.
(Arrow shows selection.)
- Each press of AUDIO will change the audio mode as shown below.
- "SAP" is selected with first press of AUDIO.

< Example >

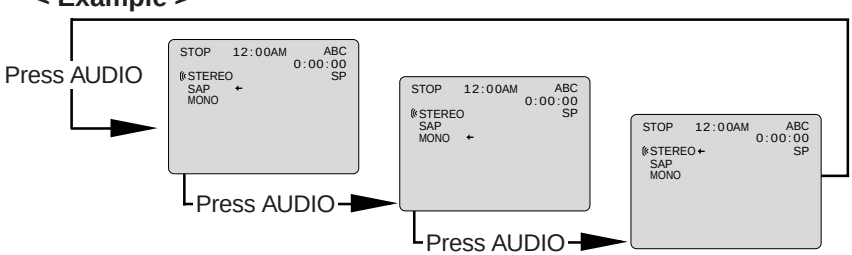

Closed Caption System

Closed Caption is ...

This multi-use system not only allows the hearing impaired to enjoy selected programs, but also makes useful information from TV stations available to everyone.

Closed Caption Mode Feature

1 **Press ACTION*** to display MAIN MENU.

2

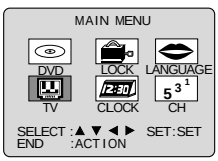

1) **Press ▲▼◄►** to select "TV."
2) **Press SET** to display SET UP TV screen.

3

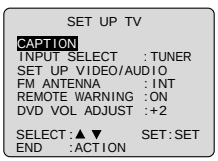

1) **Press ▲▼** to select "CAPTION".
2) **Press SET** to display CAPTION screen.

4

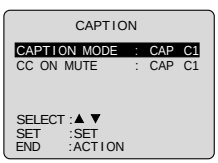

1) **Press ▲▼** to select CAPTION MODE.
2) **Press SET** repeatedly to select mode. (See left.)

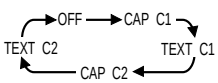

5 **Press ACTION** three times to return to the normal screen.

Recording and Playing Back a Closed Caption/ Text Program

Record : Record normally. Closed Caption/ Text signal, if present, is recorded automatically.

Playback : Start playback. Perform above steps to select desired caption mode.

Closed Caption Mode Selections

Caption Mode: CAP C1 or C2
A narration of selected TV programs is displayed.
Check TV program listings for CC (Closed Caption) broadcasts.

Caption Mode: TEXT C1 or C2
Most of the screen will be blocked out. When the TV station broadcasts information, such as program listings, it will appear in this space.

Caption Mode: OFF
Closed Caption /Text narration will not be displayed.

NOTE :
The closed caption or text signal may be broadcast over C1, C2, or both. Also, text contents can vary so you may wish to try different settings.

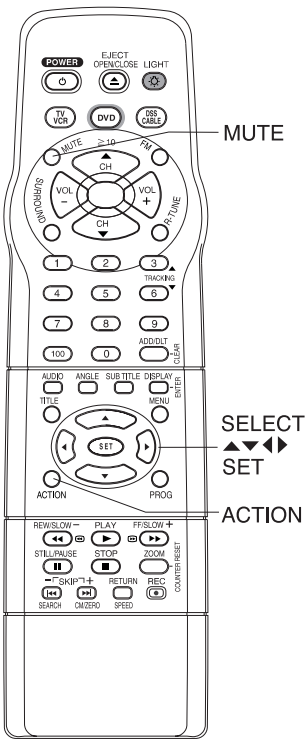

Caption On Mute Feature

Closed Caption narration, if available, is displayed when MUTE button is pressed for silence.

1 **Press ACTION** to display MAIN MENU.

2

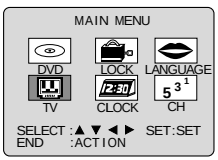

1) **Press ▲▼◀▶** to select "TV."
2) **Press SET** to display SET UP TV screen.

3

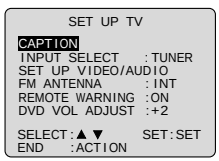

1) **Press ▲▼** to select "CAPTION".
2) **Press SET** to display CAPTION screen.

4

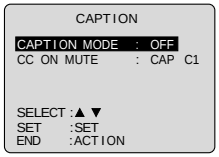

1) **Press ▲▼** to select CAPTION MODE.
2) **Press SET** repeatedly to select "OFF."

5

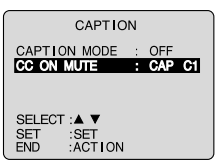

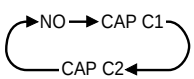

1) **Press ▲▼** to select CC ON MUTE.
2) **Press SET** repeatedly to select desired mode.

- Each press of **SET** will change the display as shown left.
- The caption may be broadcast over CAP C1 or C2.

6 **Press ACTION** three times to return to the normal screen.

7 **Press MUTE** to mute the sound and display closed captioning.
- To cancel, press MUTE again.

Note

- When a disc supporting closed caption is used, the subtitle and the closed caption may overlap. In this case, turn the subtitle or caption on mute mode off. (See page 48.)

TV Timer Features

ON-TIMER with Alarm

This unit can be set to automatically power on in one of 4 modes (TV, VCR Playback, FM radio, or DVD/Video CD/CD.) You can also combine the On-Timer with a one minute alarm that gradually increases in volume.

1 **Press PROG*** to display SET PROGRAM screen.

2

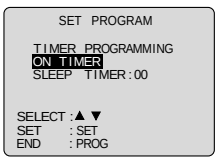

1) **Press ▲▼** to select "ON TIMER."
2) **Press SET** to display ON TIMER screen.

3

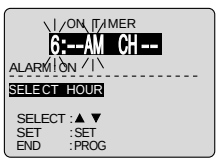

1) **Press ▲▼** to select desired settings.
2) **Press SET** to set the ON-TIMER TIME or ON-TIMER mode.

- Make sure a tape is inserted if Playback mode is selected.
- Make sure a disc is inserted if DVD (DVD/Video CD/CD) mode is selected.
- See "FM Radio" on pages 28 and 29 for instructions on how to preset FM stations.

• ON-TIMER mode selection order

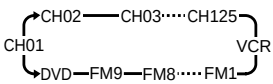

4

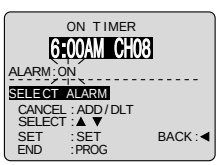

Press ▲▼ to select ALARM "ON" or "OFF."

When "ON" is selected,
an alarm will gradually increase in volume for one minute or until canceled by pressing any button (including VOL + -).

To Make Corrections,
use ▲▼ and ◄► to move back and correct.

5 **Press PROG** to set ON TIMER.
- "ON TIMER SET" is displayed.
- PROG TIMER Indicator lights up on the unit.

To Cancel ON-TIMER,
Repeat steps **1** and **2**. Then, **press ADD/DLT** to clear the time in step **3**. Now, **press PROG** to end.
"ON TIMER END" briefly appears on-screen.

Ready Checklist

☐ The clock is set to correct time.

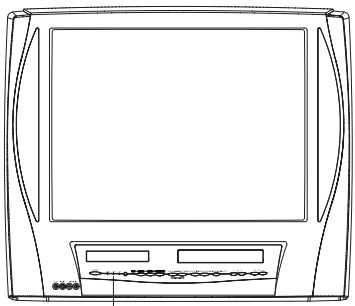

PROG TIMER Indicator

Sleep Timer

This unit can be set for auto power off.

1 **Press PROG** to display SET PROGRAM screen.

2

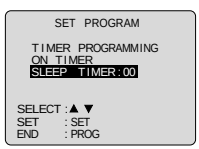

1) **Press ▲▼** to select SLEEP TIMER.
2) **Press SET** repeatedly to select the desired time.

SLEEP TIMER 30→60→90→00

To cancel,
press SET repeatedly until 00 appears.

3 **Press PROG** to return to the normal screen.
- **Pressing DISPLAY** with sleep timer set displays remaining time.

Note

If no button on the remote or unit (including a button used to turn off the alarm) is pressed within 60 minutes after unit turns itself on, it will turn itself back off.

***Important:** If a remote control button does not work when pressed, press the TV/VCR button on the remote and try the button again.

TV/VCR Status & Clock Display

Press DISPLAY
to display or remove the overlay.

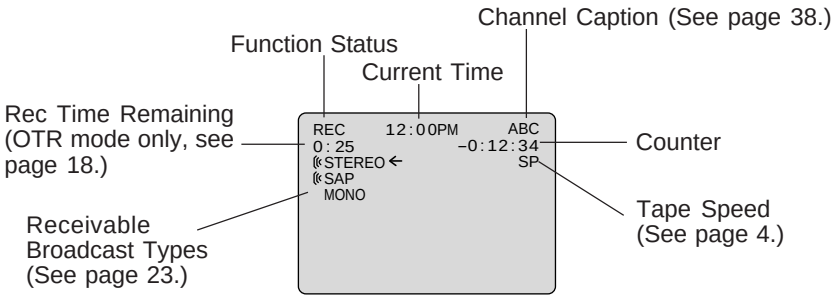

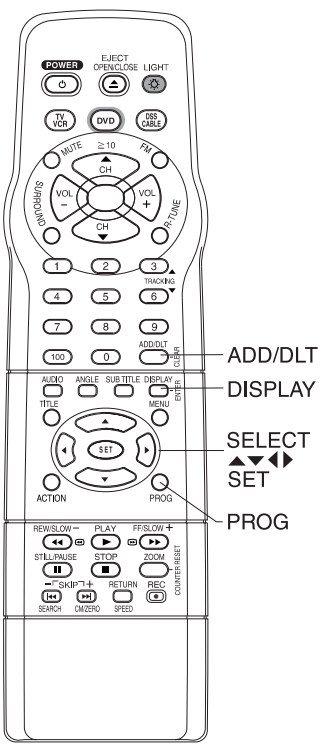

Blue Screen Display

Whenever a blank section of a tape comes up in Play mode, or when the selected channel has no broadcast signal with the Weak Signal Display Feature set to “OFF” (see page 39), the screen will turn solid blue.

Channel & Function Display

When a function button is pressed (PLAY, FF, etc.) or you change channels, the unit mode or channel number will be displayed. (Some station names may also appear if Channel Caption is set. See page 38.)

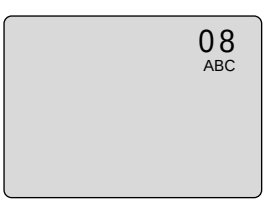

FM Radio

FM Radio is ...
This unit has an FM radio with built-in antenna, 9 station preset, and a band range of 87.5 ~ 108.1 MHz. You can even set the On-Timer (page 26) to wake up to your favorite radio station.

FM Radio Setup

1 **Press FM** on the remote to display FM radio mode.

2
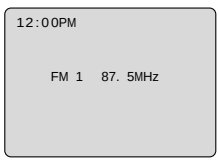

Press a number key* (1~9) to select the FM preset number.

3
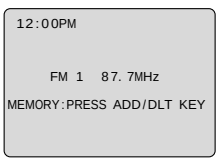

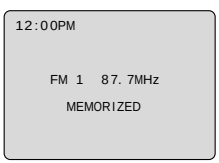

To Make Corrections, select station with a number key, then do step **3** again.
To exit FM mode, press TV/VCR or DVD on the remote.

1) **Press CH ▲▼** to select the desired radio station. (Each press changes frequency by 200 KHz.)
2) **Press ADD/DLT** to set the radio station.

Hold down CH ▲ or **▼** for a few seconds, then release to quickly scan for FM stations in your area.

- To cancel, **press CH ▲** or **▼** while in search mode.

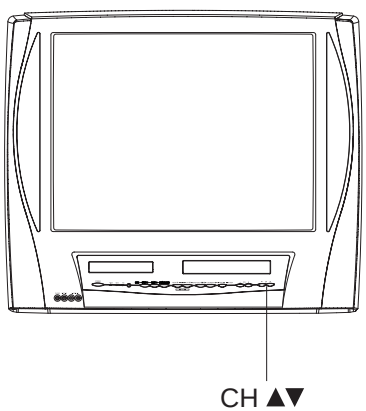

FM Antenna Setup

Make sure FM tuning is done correctly (see FM Radio Setup).

1 **Press ACTION** to display MAIN MENU.

2
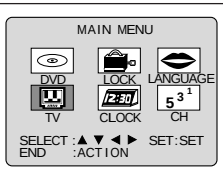

1) **Press ▲▼◄►** to select "TV."
2) **Press SET** to display SET UP TV screen.

Continued on next page.

*Important: If a remote control button does not work when pressed, press the FM button on the remote and try the button again.

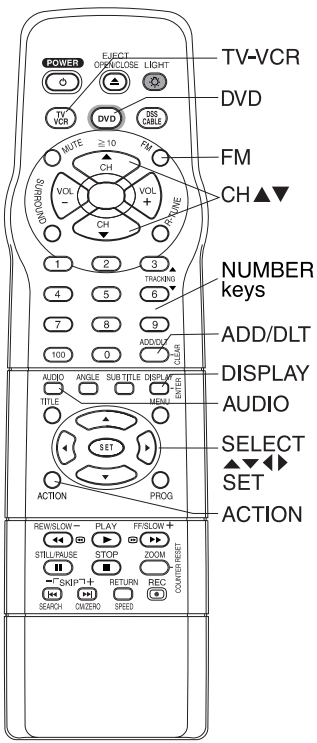

3

```
SET UP TV
CAPTION
INPUT SELECT     :TUNER
SET UP VIDEO/AUDIO
FM ANTENNA       :INT
REMOTE WARNING   :ON
DVD VOL ADJUST   :+2

SELECT:▲▼        SET:SET
END    :ACTION
```

1) **Press ▲▼** to select FM ANTENNA.
2) **Press SET** to select "INT (INTERNAL)" or "EXT (EXTERNAL)" to determine which one sounds best.

■ **For cable TV users ➛ "INT"**
■ **For antenna users ➛ "EXT"**

4 **Press ACTION** twice to end setup.

Using FM Radio

1 **Press FM** on the remote to display FM radio mode.

2

```
12:00PM

FM 1   87. 5MHz
```

Press a number key (1~9) to select a preset FM number (see FM Radio Setup on page 28).

To exit FM mode, press TV/VCR or DVD on the remote.

Audio Mode for FM Radio

```
12:00PM
STEREO ←
 MONO
   FM 1   87. 7MHz
```

Press AUDIO repeatedly to select "STEREO" or "MONO" in FM Radio mode.

Notes

- FM radio cannot be recorded on a Video cassette.
- You may get better reception by repositioning the unit.
- You cannot select FM Radio mode during playback or record, or while a blue back screen (PROG, ACTION, MENU) is displayed.
- Once stations are set, the selected station and current time are displayed when FM Radio mode is entered.
  To remove time, press DISPLAY. If DISPLAY is pressed again, the unit status screen appears.

Timer Recording

You can set up to 8 programs to be recorded while you are away.

Ready Checklist

- ☐ All connections are made.
- ☐ Your unit is plugged in.
- ☐ The clock is set to correct time.
- ☐ The tape is long enough.
- ☐ The record tab is in place.

1

Press PROG* to display SET PROGRAM screen.

2

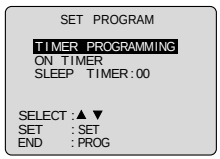

1) **Press ▲▼** to select TIMER PROGRAMMING.
2) **Press SET** to display screen.

- If a program is already in memory, **press ▲▼**, and **SET** to select an unused program number.

3

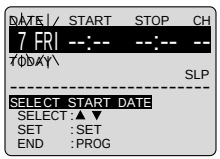

Press ▲▼ to select and **SET** or **◀▶** to set the recording DATE.

- 1~31 = One time
- DAILY = MON~FRI
- WEEKLY SUN~SAT = Same time once a week

Example

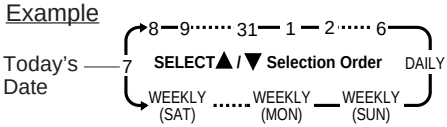

Repeat step 3 to set:

- Start time, stop time
- Channel (or LINE for outside source)
- Speed (SP, LP, SLP)

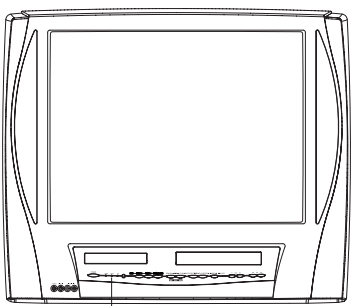

PROG TIMER Indicator

4

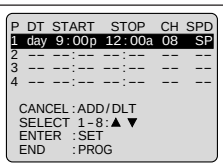

Press PROG to end the program.

To Enter More Programs, press ▲▼ to select and **SET** to set a blank program number, and then repeat step 3.

5

Press PROG twice to exit this mode.

- If you're using a cable box, make sure that it is tuned to the desired channel and the power is left on for timer recording.
- PROG TIMER Indicator lights up on the unit.

Cancel a Timer Recording: (Recording is in progress)

Hold down STOP for a few seconds to cancel the Timer Recording.

- Any future daily or weekly recordings will be performed as programmed.

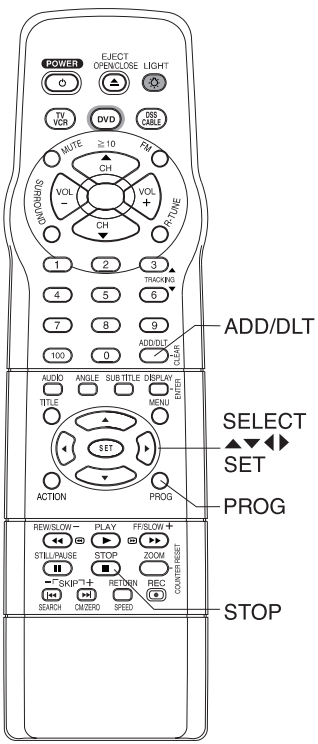

Review, Replace or Clear Program Contents : (Recording is not in progress)

1 **Repeat steps 1 and 2 on page 30.**

2

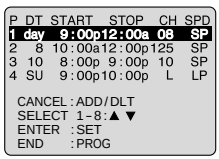

Press ▲▼ to select the desired program.

3 **To Replace program...**

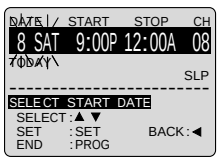

1) **Press SET** to display.
2) **Press ▲▼** to select and **press SET** or **◀▶** to set new program contents.
3) **Press PROG**.

To Clear program...

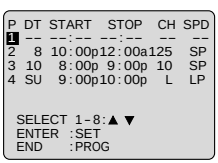

Press ADD/DLT.

4 **Press PROG** twice to exit this mode.

Notes

- 2 minutes before Timer recording is performed, "PLEASE PREPARE FOR TIMER REC" appears and/or the PROG TIMER Indicator flashes. Be sure a cassette with record tab is loaded and the unit is in Stop mode.
- If the start times of two programs overlap, the lower numbered program will have priority.
- If the start time for a Timer Recording comes up during a normal recording or One Touch Recording (page 18), the Timer Recording will not be performed.
- If there is a power interruption of more than one minute, the recording may not be performed or continued.
- If "INCOMPLETE" appears after all items have been set, check all entries and make necessary corrections.

Cable Box Universal Remote Control Feature

Universal Remote Control is...

The Remote Control may be set up to control some basic DSS or Cable box functions.

The Universal Remote Control Setup

1 Find your DSS box or Cable box Brand Code Number from one of the charts on the next page.

2 Setup remote.

Hold down DSS CABLE and **press number keys** to enter code.

- If code number is 100 or greater, e.g., press 1 - 0 - 2 for 102.

3 Confirm code entry.

Press POWER* to turn selected unit ON or OFF.

- See below for controllable functions in each mode.

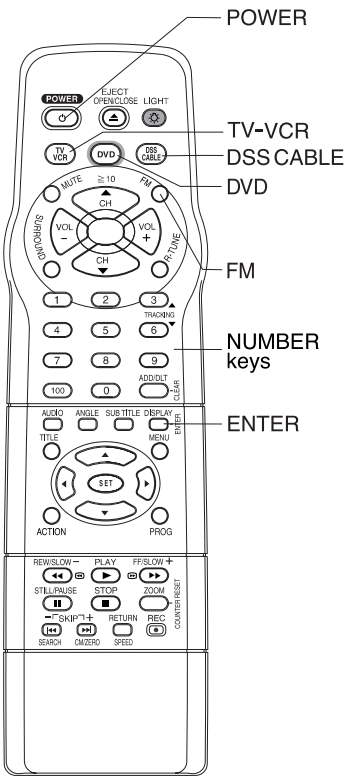

Notes

- Please repeat the Universal Remote Control Setup after replacing remote control batteries.
- The remote control will not operate all DSS receivers or Cable Boxes made by the manufacturers listed. If you get no results, your particular brand cannot be controlled.

Using the Universal Remote Control (Available Buttons / Functions)

Once the remote control has been properly set up, you can select TV-VCR, FM, DVD, DSS or CABLE mode depending on which functions you wish to control.

Press TV/VCR, FM, DVD or DSS CABLE on the remote control to select the desired mode. (See below for buttons available in each mode.)

Set to TV/VCR, FM, DVD:

All TV functions, as well as functions of TV-VCR, FM, or DVD.

Set to DSS CABLE:

- Basic VCR functions, e.g. PLAY, REC, etc.
- CABLE/DSS function, e.g. POWER, ENTER, NUMBER keys (except 100 key), CH UP/DOWN.

*Important: If a remote control button does not work when pressed, press the TV/VCR, DVD, FM button on the remote and try the button again.

DSS Brand Code Numbers

Toshiba 90
Hitachi/ Hughes 91, 99
Primestar 92
Drake 93
Magnavox 94, 95
Uniden 94, 95
Optimus 94, 95
Panasonic 96
ProScan 97
RCA 97
SONY 98, 105

Cable Box Brand Code Numbers

Archer 44, 06, 01, 120, 05, 63, 126
Cableview 29, 09, 01, 63, 120, 44, 42, 30, 52, 04, 124, 126
Citizen 44, 52, 30, 63, 42, 04, 124, 126
Curtis 08, 09, 25, 61, 53, 87
Century 44, 51, 75, 59, 126
Cabletenna 29, 09, 01, 63, 120, 44, 126
Cable Cinema 29, 09, 01, 63, 120, 44, 126
Diamond 29, 09, 01, 63, 120, 44, 126
Eagle 62, 40, 22, 13, 58, 20, 26, 107
Eastern 28, 29, 130
Explorer 08, 09, 25, 61, 53, 87
Gemini 30, 04, 124
General Electric 01, 57, 120
General Instruments 01, 84, 83, 34, 03, 02, 04, 55, 65, 66, 67, 68, 120, 106, 121, 122, 115, 117, 118, 124
Gerrard 44, 51, 75, 59
GC Electronics 44, 42, 63, 29, 30, 52, 04, 124, 126
Hamlin 41, 14, 15, 28, 102, 104, 103, 130
Hitachi 31
Jerrold 01, 84, 83, 34, 03, 02, 04, 55, 65, 66, 67, 68, 120, 106, 121, 122, 115, 117, 118, 124
Jasco 30, 04, 124
Macom 31
Magnavox 26, 112
Matsushita 17, 16, 08, 87, 109
Movietime 32, 39, 42, 44, 126, 38, 40
Maestro 74, 35
NEC 40, 19, 38, 32
NSC 40, 19, 38, 32
Novavision 08, 09, 25, 61, 53, 87
Next Level 01, 84, 83, 34, 03, 02, 04, 55, 65, 66, 67, 68, 120, 106, 121, 122
Oak 46, 11, 129, 101
Oak Sigma 46, 11, 129, 101
Panasonic 17, 16, 08, 87, 109
Philips 23, 24, 20, 13, 07, 50, 128, 129
Pioneer 06, 05, 12
Pulsar 04, 42, 63, 44, 30, 52, 124, 126
Quest 06, 05, 12
Radio Shack 44, 51, 75, 59, 126
RCA 17, 16, 08, 87, 109
Realistic 44, 51, 75, 59, 126
Recoton 44, 51, 75, 59, 126
Regal 41, 14, 15, 28, 102, 104, 103, 130
Regency 28, 29, 130
Rembrandt ... 44, 42, 63, 29, 01, 32, 39, 120, 126
Samsung 42, 06, 32, 05, 40
Scientific Atlanta 08, 09, 25, 61, 53, 87
Sheritech 27
Signal 26, 112
SL Marx 42, 06, 32, 40, 43, 44, 52, 63, 126
Sprucer 17, 16, 08, 87, 109
Standard Components 32, 39, 42, 44, 126
Stargate 04, 42, 32, 40, 63, 44, 30, 52, 06, 124, 126
Sylvania 19, 18
Teknika 74, 35
Telecaption 77, 127
Teleview 40, 19, 38, 32, 42, 06
Texscan 19, 18
Tocom 34, 33, 01, 42, 66, 120
Toshiba 36
Unika 44, 42, 63, 29, 01, 126, 120
Universal 52, 43, 44, 63, 42, 126
Viewstar 62, 40, 22, 13, 58, 20, 26, 107
Videoway 07, 23, 50, 129
Vidtek 64
Zenith 07, 23, 50, 129

Notes

- In DSS or CABLE mode, it may be necessary to press ENTER after pressing number keys for channel selection.
- In DSS or CABLE mode, POWER, CH Up/Down, Number Keys, ACTION, PROG, DISPLAY/ENTER, SEARCH/SKIP-, R-TUNE, SELECT, SET, CM SKIP/ZERO/SKIP+, COUNTER RESET/ZOOM, ANGLE, AUDIO, TITLE, SUB TITLE, MENU, or ADD/DLT are not available. Press TV/VCR, FM, DVD to use these functions.
- Depending on your DSS receiver or Cable box brand, some of the functions listed may not be remote controllable.
- Some DSS receiver or Cable box brands require you to turn on the power manually.
- Due to changes in infra-red commands used by manufacturers, some brands have several codes. If your unit does not respond to the first code, please try the next one.

Tape Operation

Search System is ...

Each time a recording is made, an invisible index mark is placed on the tape.
When timer recordings are made, program index and information are also included.
These index marks can be used to access or scan recordings.

Index Search

Go directly to the desired recording.

1

INDEX SEARCH

ENTER INDEX NUMBER:1
USING 1-9 KEYS

FORWARD SEARCH:FF
REVERSE SEARCH:REW
NEXT : SEARCH
EXIT : STOP

Press SEARCH* in Playback or Stop mode to display INDEX SEARCH screen, and then **press number keys** to select the recording number.

- To calculate number, see below.

Press FF or **REW** to start search.

2

INDEX SEARCH

FORWARD SEARCH:FF
REVERSE SEARCH:REW

Play begins at search end.
To search forward or back 1 index, **press FF** or **REW** while screen left is displayed (10 seconds).

To cancel, press PLAY or **STOP.**

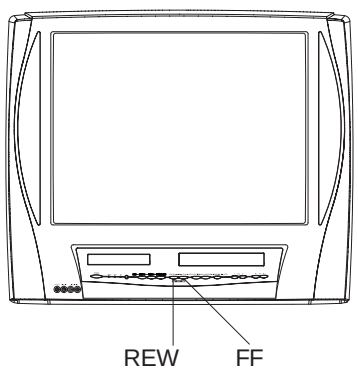

■ To calculate the Index Number

Example 1:
To go to rec. 2 from rec. 4, enter 3 and press REW.

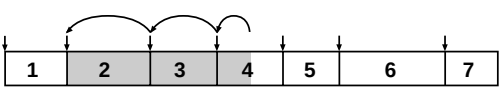

Example 2:
To go to rec. 6 from rec. 2, enter 4 and press FF.

NOTE: ↓ indicates start points of each recording.

Notes

- Make each entry within 5 minutes, or the Index Search mode will be canceled.
- If Index Search is started very close to an index mark, that index mark may not be counted in the search.

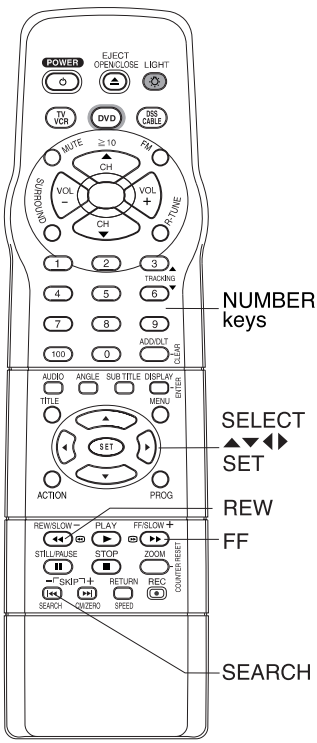

Program End Search

Locates end point of recording for continuity.

1 **Press SEARCH** twice in Playback or Stop mode to display PROGRAM END SEARCH screen .

2

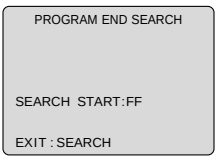

Press FF to start search.

To cancel, press PLAY or **STOP.**

Example of **Program End Search** operation.

Fig.1

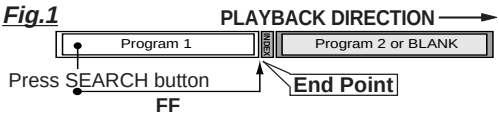

Fig.2

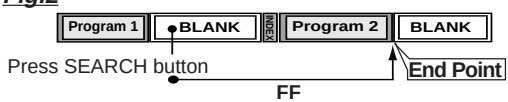

Fig.3 If search exceeds a few seconds in BLANK area.

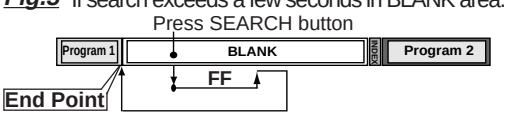

Upon locating end point...
The unit searches slightly past end point, reverse searches, and plays the last few seconds of the program, then stops.

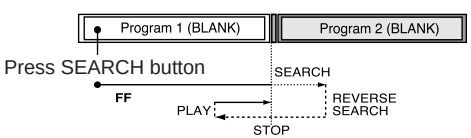

Note

- If Program End Search is started very close to an index mark, that mark may be skipped over.

Repeat Play

Set to see a recording over and over.

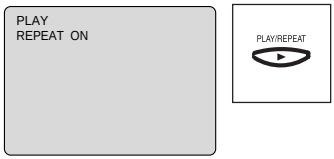

To turn "ON,"
press PLAY/REPEAT on the unit repeatedly in Play mode to select "REPEAT ON".

To turn "OFF,"
repeat above to select "REPEAT OFF."

- Playback repeats when tape end is reached or unrecorded portion over 30 seconds is detected.

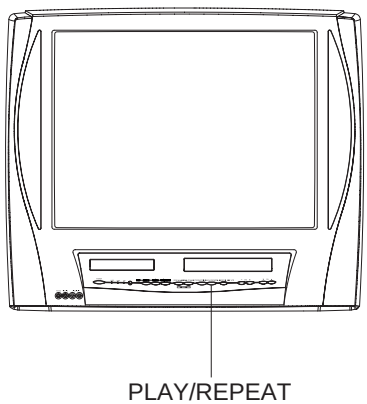

Note

- For repeat play in DVD mode, see page 55.

Zero Search

To quickly return to a specific tape counter location.

1 **Press DISPLAY*** during playback to display the Counter.

2 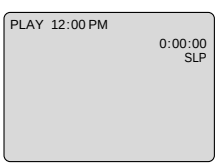

Press COUNTER RESET at the desired position to reset to "0:00:00."

3 **Continue playback, rewind, or fast forward.**

4 **Press STOP.**

5 **Press CM/ZERO** in stop mode to start ZERO SEARCH.

- Unit goes into FF or REW mode and stops at the last point the Counter was set to 0:00:00.

Auto Operation Functions

■ **Auto Shut Off**
No broadcast signal in TV mode (Only when Weak Signal Display is set to OFF.), DVD stops, or blank tape is played for 5 minutes
➛ Power turns off
• This feature is canceled if any button is pressed during above conditions.

■ **Auto Playback**
Insert a tape in Power off mode
➛ Power turns on
• Playback begins if tape has no record tab.

■ **Auto Rewind (except for Recording)**
Tape reaches its end
➛ Rewind, ➛ Stop

■ **Playback Auto Eject (Repeat Play is "OFF")**
Tape with no record tab reaches its end
➛ Rewind, ➛ Stop, ➛ Eject

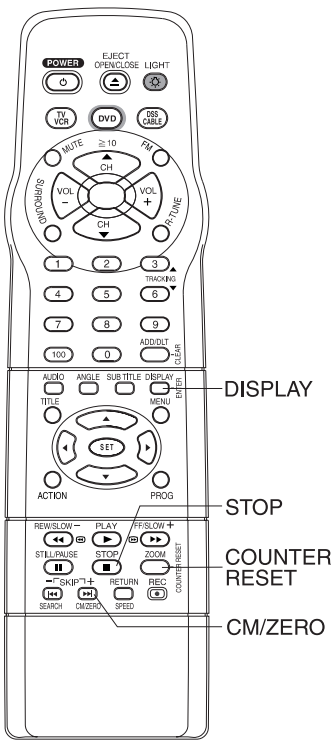

Commercial Skip

By pressing the CM/ZERO button in Playback mode you can skip over 1 to 3 minutes of recorded tape in just a few seconds.

Press CM/ZERO repeatedly to select skip time in Playback mode.
• No indication appears.

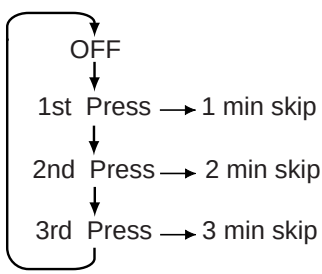

Channel Caption

Channel Caption is ...
Station names, e.g. ABC, CNN, etc. are set so they will appear when a channel is selected. Choose 24 preset names.

Ready Checklist
☐ You need a list of stations and the channel numbers you receive them on.

1 **Press ACTION*** to display MAIN MENU.

2

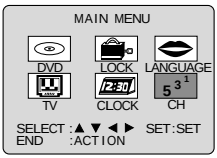

1) **Press ▲▼◄►** to select "CH."
2) **Press SET** to display SET UP CHANNEL screen.

3

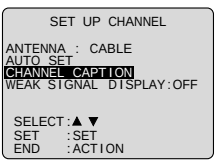

1) **Press ▲▼** to select CHANNEL CAPTION.
2) **Press SET** to display screen.

4

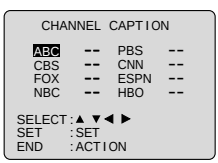

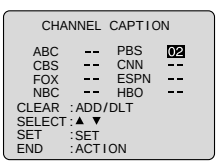

1) **Press ▲▼** to select a station.
2) **Press SET** (or ►) to move cursor to the right.
3) **Press ▲▼** to select channel number.
4) **Press SET** (or ◄►) to set preset captions.

• Repeat step **4** until the Caption List is complete.

To Make Corrections
Press ▲▼, then **SET** (or ►) to select channel number.
Press ▲▼ to change, or **ADD/DLT** to delete.

5 **Press ACTION** three times to end setup.

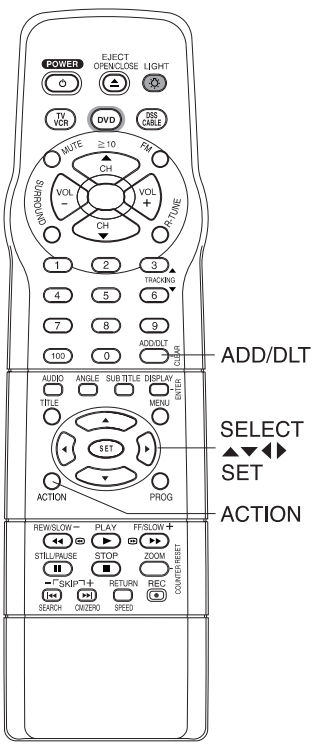

ADD/DLT
SELECT ▲▼◄►
SET
ACTION

Ready Checklist

☐ It is necessary to enter TV mode by pressing TV/VCR before selecting "CH" on the MAIN MENU.

Remote Warning Feature

When Universal Remote Control (page 32) is used, and this feature is set to "ON," a warning appears whenever an invalid key is pressed in DSS or Cable mode.

1 **Press ACTION** to display MAIN MENU.

2

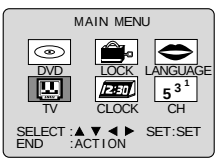

1) **Press ▲▼◀▶** to select "TV."
2) **Press SET** to display SET UP TV screen.

3

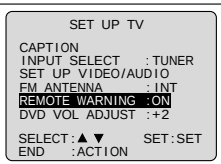

1) **Press ▲▼** to select REMOTE WARNING.
2) **Press SET** to set "ON" or "OFF."

• "REMOTE WARNING : OFF"
➢ Remote warning will not appear even if invalid key is pressed.

4 **Press ACTION** twice to return to normal screen.

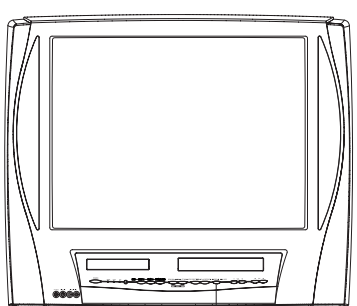

Weak Signal Display Feature

When "ON" is selected, the picture is displayed even when a broadcast signal is weak or non-existent.

1 **Press ACTION** to display MAIN MENU.

2

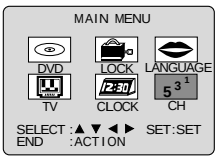

1) **Press ▲▼◀▶** to select "CH."
2) **Press SET** to display SET UP CHANNEL screen.

3

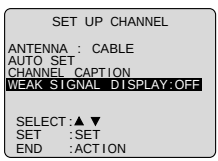

1) **Press ▲▼** to select WEAK SIGNAL DISPLAY.
2) **Press SET** to set "ON" or "OFF."

Notes

• "ON" = Picture is displayed regardless of signal condition, and may not always be clearly visible.
"OFF"= Screen turns solid blue when signal is absent or weak.
• If unit is connected to equipment which has blue back feature, selecting "ON" will have no effect on the other equipment.

4 **Press ACTION** twice to return to the normal screen.

VCR Lock

All operations are prohibited except Timer recording and tape eject. Useful for families with small children.

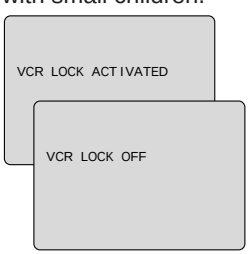

In Stop mode, **hold down REC** on the unit without a cassette inserted for 7 seconds to turn "ON." (Please ignore "NO CASSETTE" warning.)

Repeat above with or without cassette to turn "OFF."

• VCR Lock is canceled automatically after about 24 hours if clock is set.

V-Chip Control Feature

V-Chip Control Feature is...

This unit has a built-in V-Chip Control which allows you to block unwanted TV usage based on US MOVIES and US TV PROGRAMS Ratings.

Process of V-Chip Control Feature

Enter Code ⇨ **Setup** ⇨ **Blocking**

Enter Secret Code

A 4-digit code must be entered to view a blocked program or change rating settings.

1 **Press ACTION*** to display MAIN MENU.

2

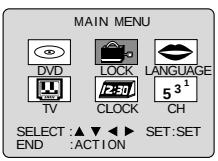

1) **Press ▲▼◄►** to select “LOCK.”
2) **Press SET** to display LOCK screen.

3

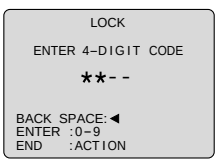

1) **Press number keys** to enter your secret code.
2) **Enter same code** again for confirmation.

- Step 2) not necessary when changing rating or secret code.
- Take care that you are not observed entering the secret code.

To Make Corrections
Press ◄ repeatedly to move the cursor.
Press number keys to make the correction.

4

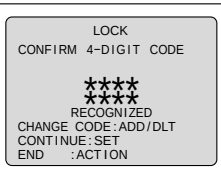

Press SET to display US Ratings menu (see pages 41, 42).

Or

Press ACTION twice to exit.

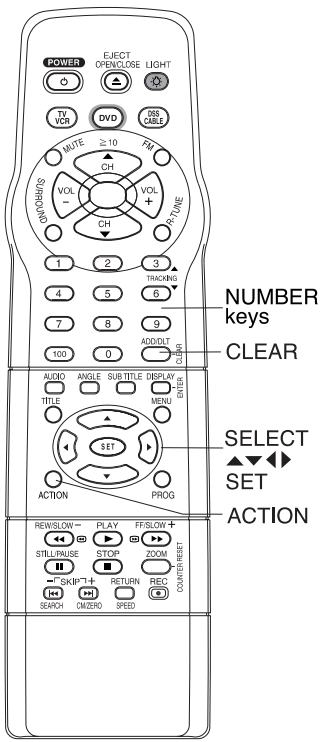

Changing your secret code

- You will need your current code.

Do steps **1** ~ **3**. In step **4**, **press CLEAR** to clear current code.
Repeat steps **3** and **4** to enter new code.

Notes

- Some rental movies do not include V-Chip data.
- DO NOT forget your secret code.
- Once ratings are set, restricted tapes or programs cannot be accessed unless the secret code is entered.

*Important: If a remote control button does not work when pressed, press the TV/VCR button on the remote and try the button again.

If LOCK menu is not displayed, perform "Enter Secret Code" steps on page 40.

Process of V-Chip Control Feature

Enter Code ⇨ **Setup** ⇨ Blocking

US MOVIES Ratings

1

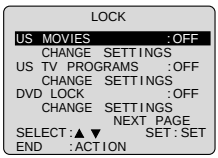

1) **Press ▲▼** to select US MOVIES.
2) **Press SET** to set "ON" or "OFF."

■ **"ON" ➛ V-Chip Control is activated.**
■ **"OFF" ➛ V-Chip Control is deactivated.**

Note

- "NEXT PAGE" displays CANADIAN V-Chip setting menu. Not necessary except when viewing Canadian tapes or broadcasts.

2

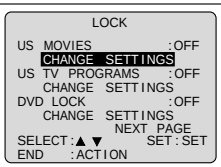

1) **Press ▲▼** to select CHANGE SETTINGS.
2) **Press SET** to display screen.

3

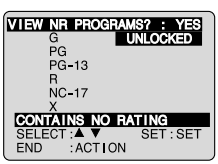

1) **Press ▲▼** to select VIEW NR PROGRAMS?.
2) **Press SET** to set "YES" or "NO."

NR (Not Rated) PROGRAMS
Some movies, such as old movies or foreign movies usually have no ratings.

4

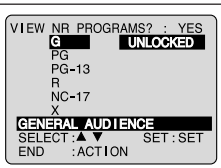

1) **Press ▲▼** to select and **SET** to set ratings to be blocked. (See ratings chart on this page.)

5 **Press ACTION** to redisplay LOCK menu and continue with US TV PROGRAMS Ratings Setup (page42).
Or, **press ACTION** four times to exit.

US MOVIES RATINGS

G	**GENERAL AUDIENCE:** All ages admitted.
PG	**PARENTAL GUIDANCE:** Some material may not be suitable for children.
PG-13	**PARENTS CAUTIONED:** Some material may be inappropriate for children under 13.
R	**RESTRICTED:** Children under 17 must be accompanied by a parent or adult.
NC-17	**OVER AGE 17 ONLY:** No one 17 and under admitted.
X	**ADULTS ONLY:**

V-Chip Control Feature (continued)

If LOCK menu is not displayed, do "Enter Secret Code" steps on page 40.

Process of V-Chip Control Feature

Enter Code ⇨ **Setup** ⇨ Blocking

US TV PROGRAMS Ratings

1

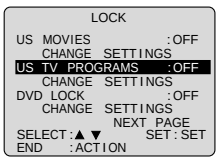

1) **Press ▲▼*** to select US TV PROGRAMS.
2) **Press SET** to set "ON" or "OFF."

■ **"ON" ➔ V-Chip Control is activated.**
■ **"OFF" ➔ V-Chip Control is deactivated.**

Note

- "NEXT PAGE" displays CANADIAN V-Chip setting menu. Not necessary except when viewing Canadian tapes or broadcasts.

2

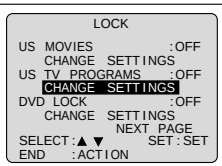

1) **Press ▲▼** to select CHANGE SETTINGS.
2) **Press SET** to display screen.

3

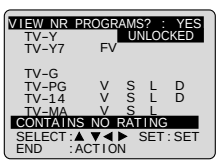

1) **Press ▲▼** to select VIEW NR PROGRAMS?.
2) **Press SET** to set "YES" or "NO."

NR (Not Rated) PROGRAMS
Some TV shows, such as news, sports, weather, bulletins, emergency information usually have no ratings.

4

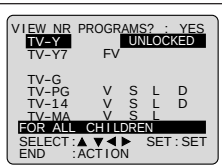

1) **Press ▲▼** to select and **SET** to set ratings to be blocked. (See ratings charts on this page.)

Note

You may select from standard TV ratings (chart 1), or customize to a specific content rating (chart 2).

- Ratings highlighted in Green will be blocked. Ratings in white letters will not be blocked.

5 **Press ACTION** four times to exit this mode.

US TV PROGRAMS RATINGS: Chart 1

TV-Y	**FOR ALL CHILDREN:** Content specifically geared to young viewers ages 2-6.
TV-Y7	**FOR AGE 7 AND OLDER:** May contain mild physical or comedic violence which may frighten children under 7.
TV-G	**GENERAL AUDIENCE:** Contains little or no violence, strong language, or sexual dialogue or situations.
TV-PG	**PARENTAL GUIDANCE:** May contain infrequent coarse language, limited violence, some suggestive sexual dialogue and situations.
TV-14	**PARENTS CAUTIONED:** May contain sophisticated themes, sexual situations, strong language, and more intense violence.
TV-MA	**MATURE AUDIENCE:** May contain mature themes, profane language, graphic violence, and sexual situations.

US TV PROGRAMS RATINGS: Chart 2

FV	Fantasy Violence
V	Violence
S	Sexual Situations
L	Adult Language
D	Sexually Suggestive Dialogue

Process of V-Chip Control Feature

Enter Code ⇨ Setup ⇨ Blocking

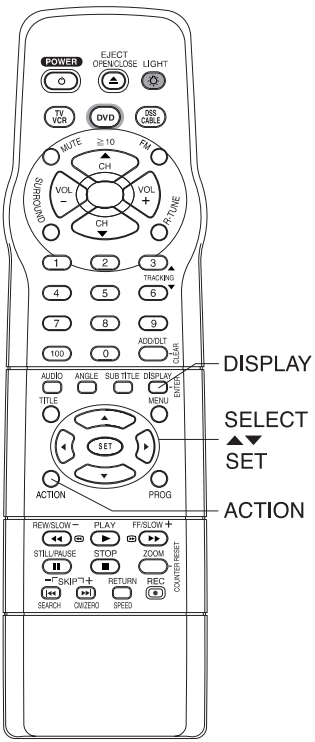

Blocking Message

<When V-Chip Control is activated>

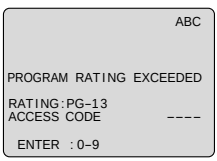

- If a program or movie exceeds the ratings you have set, a message will appear on a black background and sound is muted.

To View a Blocked Program/Movie

[Temporarily Deactivate V-Chip Control]

Enter your secret code (ACCESS CODE) in the Blocking Message screen.

- V-Chip Control is reactivated when power is turned off or power failure occurs.

[Deactivate V-Chip Control]

Enter your secret code (steps 1-4 page 40). Then, set US MOVIES and/or US TV PROGRAMS to "OFF" using ▲▼ and **SET**. (Ratings set on pages 41 and 42 is retained and will be in effect when V-Chip Control is activated again.)

Audio Features

Audio Mode for Playback

Choose the type of sound track for playback.

1 See the "**Playback a Tape**" section on page 18 to playback the tape.

2 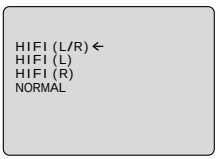

Press AUDIO repeatedly (each press within 5 seconds) to select desired mode.

- Select "HIFI (L/R)", "HIFI (L)" or "HIFI (R)" to listen to stereo recordings in stereo sound. Select "NORMAL" for monaural sound.
- This screen appears when you **press AUDIO** during playback.

With the proper audio mode setting, your unit can:

- record and playback MTS stereo broadcast (main language) in stereo Hi-Fi. Stereo sound is recorded on the left and right audio tracks and on the video portion of a tape.
- record and playback a monaural broadcast (main language) or SAP (Secondary Audio Program, usually in a second language) on the Hi-Fi tracks for better quality monaural sound.
- playback non-Hi-Fi tapes in monaural.

Audio Mode for Recording

Choose audio mode to match recording type.

1 **Press AUDIO** repeatedly to select the audio mode according to the type of broadcast to be recorded.

- The Audio mode selected stays in effect until it is changed.

2 See the "**Record On a Tape**" section on page 18 to do a recording.

Notes

- Only tapes recorded in Hi-Fi stereo will playback with true stereo sound. Standard stereo tapes will playback with monaural sound.
- To listen to Hi-Fi stereo playback, the unit AUDIO (L/R) jacks must be connected to a stereo amp and speakers.
- There may be a difference in audio level between Hi-Fi and normal audio playback.

DVD Volume Adjust

Audio recorded on a DVD or Video CD often incorporates a dynamic range of sound.
This means that, when compared to a music CD, etc., the average volume is generally lower and the peaks may be higher. This unit can be set so that the volume is increased automatically.

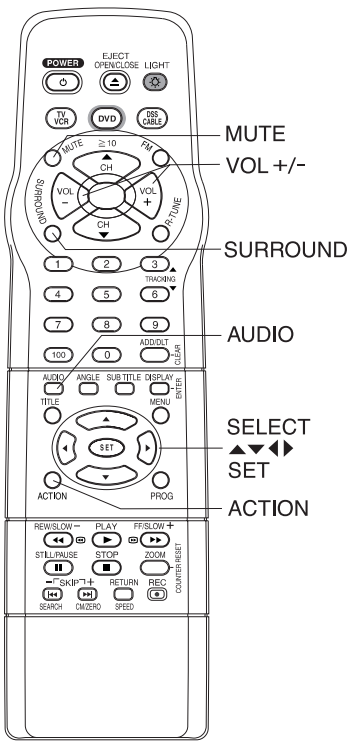

1 **Press ACTION*** to display MAIN MENU.

2

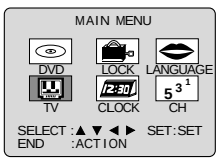

1) **Press ▲▼◀▶** to select "TV."
2) **Press SET** to display SET UP TV screen.

3

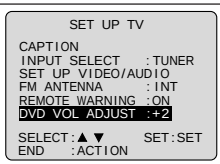

1) **Press ▲▼** to select DVD VOL ADJUST.
2) **Press SET** to set the level (0, +1, or +2).

4 **Press ACTION** twice to return to normal screen.

Surround Sound System

You can hear a deeper, 3-D sound effect using just the unit's two front speakers.

Set Surround sound.

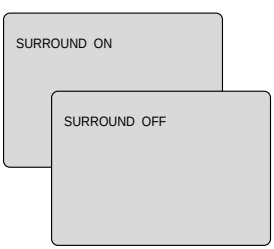

Press SURROUND.
•"SURROUND ON" is displayed.

To Cancel, press SURROUND.

Notes

- Surround sound effect is not available for normal (mono) broadcasts.
- The surround effect (TV, VCR mode only) is not output to Audio Output L/R Connector.

Video / Audio Menu

*__Important:__ If a remote control button does not work when pressed, press the TV/VCR button on the remote and try the button again.

This feature allows easy setting of picture and sound suitable for each program source.

Video Menu

1 **Press ACTION*** to display MAIN MENU.

2

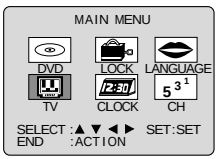

1) **Press ▲▼◄►** to select “TV.”
2) **Press SET** to display SET UP TV screen.

3

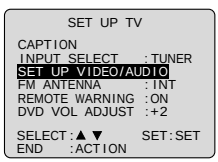

1) **Press ▲▼** to select “SET UP VIDEO/AUDIO.”
2) **Press SET** to display.

4

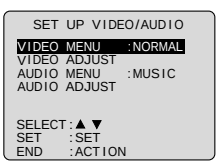

1) **Press ▲▼** to select “VIDEO MENU.”
2) **Press SET** repeatedly to select desired mode. (See below.)

5 **Press ACTION** three times to end setup.

[Video Menu]

- **NORMAL**
  Factory setting.
- **MOVIE**
  Picture is adjusted for a movie-like feel.
- **NIGHT**
  Color and picture intensity are adjusted to be easier on the eyes for night viewing.

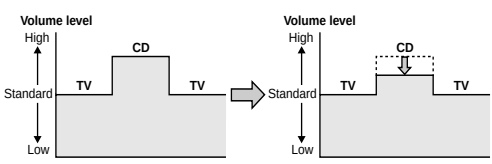

<Audio AGC Example>

Audio Menu

a **Do steps 1 - 3 left.**

b

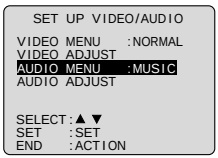

1) **Press ▲▼** to select “AUDIO MENU.”
2) **Press SET** to select desired mode. (See below.)

C **Press ACTION** three times to end setup.

[Audio Menu]

- **NORMAL**
- **AUTO**
  [Audio AGC (Auto Gain Control)**]**
  The sound level is automatically adjusted to suit the program source (see below left).
- **MOVIE**
  Sound suited to movies.
- **MUSIC**
  Sound suited to music. (Factory setting)
- **SPEECH**
  Sound suited to dialogue.

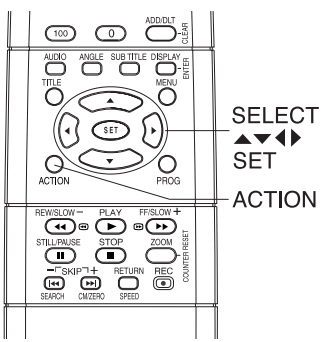

Notes

- The effects of this feature on the signal is not output to the Audio/Video Output Connector.
- When AUDIO MENU mode is “AUTO,” the AUDIO ADJUST setting will be “STANDARD.”
- AUDIO MENU settings remain in memory.
- VIDEO MENU settings do not remain in memory.

Video / Audio Adjustment

Video Adjustment

1 **Press ACTION** to display MAIN MENU.

2

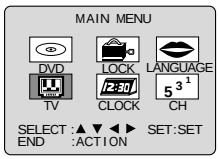

1) **Press ▲▼◄►** to select “TV.”
2) **Press SET** to display SET UP TV screen.

3

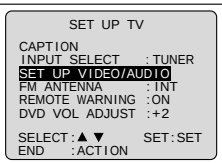

1) **Press ▲▼** to select “SET UP VIDEO/AUDIO.”
2) **Press SET** to display.

4

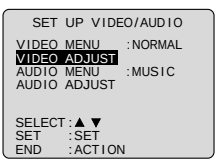

1) **Press ▲▼** to select “VIDEO ADJUST.”
2) **Press SET** to display.

5

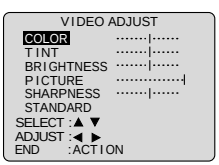

1) **Press ▲▼** to select an item. (See below.)
2) **Press ◄►** to adjust.

To Reset VIDEO Controls.
Press ▲▼ and **SET** to select and set “STANDARD.” All controls return to their factory settings.

6 **Press ACTION** four times to end setup.

[VIDEO Adjustment]

- **COLOR Control**
  Adjust color intensity.
- **TINT Control**
  Adjust for natural flesh tones.
- **BRIGHTNESS Control**
  Adjust picture brightness.
- **PICTURE Control**
  Adjust picture intensity by adjusting both contrast and color level in the proper balance.
- **SHARPNESS Control**
  Adjust picture sharpness.

Audio Adjustment

a **Press ACTION** to display MAIN MENU.

b

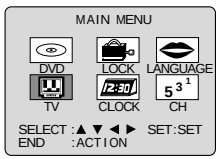

1) **Press ▲▼◄►** to select “TV.”
2) **Press SET** to display SET UP TV screen.

c

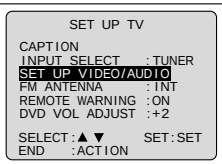

1) **Press ▲▼** to select “SET UP VIDEO/AUDIO.”
2) **Press SET** to display.

d

1) **Press ▲▼** to select “AUDIO ADJUST.”
2) **Press SET** to display.

e

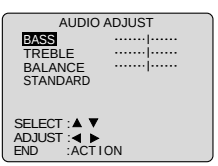

1) **Press ▲▼** to select an item. (See below.)
2) **Press ◄►** to adjust.

To Reset AUDIO Controls.
Press ▲▼ and **SET** to select and set “STANDARD.” All controls return to their factory settings.

f **Press ACTION** four times to end setup.

[AUDIO Adjustment]

- **BASS Control**
  To adjust the intensity of low frequency sound.
- **TREBLE Control**
  To adjust the intensity of high frequency sound.
- **BALANCE Control**
  To adjust the (L/R) unit speaker output level.

• The levels set here do not affect other audio equipment when connected to the Audio Output L/R Connector.

Subtitle Language (DVD only)

You can select a different subtitle language (if offered) than the one set at the Settings for DVD Operation. (See page 58.)

1

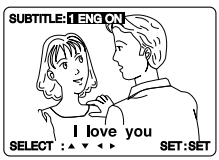

Press SUB TITLE* in Play mode to display the subtitle selection on-screen.

- Display disappears after 5 seconds.
- When no subtitles are offered, "-" will be displayed instead of the language number.

2

1) **Press ▲▼** to select desired language.
2) **Press ►** (or ◄) to set.
3) **Press ▲** (or ▼) to select "ON" or "OFF."

Number of subtitle language being played back.

Notes

- When closed captioning is used along with subtitles, they may overlap. If so, turn one function off. (See pages 24 and 25.)
- If after several presses of the button the language does not change, language selection is not offered on the disc.
- Subtitles may not change to the selected language immediately.
- When power is turned on again or disc is removed, subtitles revert to initial setting language. If the initial language is not recorded on the disc, the disc's priority language will appear.

Audio Soundtrack Language (DVD only)

You can change the audio soundtrack language, selected at the Settings for DVD Operation, to a different language if available. (See page 58.) (This operation works only with discs on which multiple audio soundtrack languages are recorded.)

a

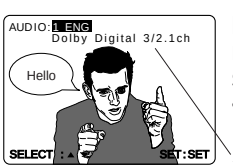

Press AUDIO in Play mode to display the audio selection on-screen.

- Display disappears after 5 seconds.

Audio attribute 1 type, sampling frequency, bit No. of the disc.

b

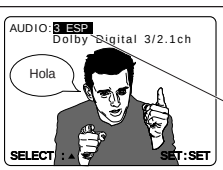

1) **Press ▲▼** to select desired language.

Number of the audio soundtrack language being played back.

Ready Checklist

☐ Please read "Basic DVD Operation" on page 20.

[Subtitle language (No.)]
[Audio soundtrack language (No.)]

ENG	English
FRA	French
DEU	German
ITA	Italian
ESP	Spanish
NLD	Dutch
SVE	Swedish
NOR	Norwegian
DAN	Danish
POR	Portuguese
RUS	Russian
JPN	Japanese
CHI	Chinese
KOR	Korean
MAL	Malay
VIE	Vietnamese
THA	Thai
✻	Other

- Change the No. by **pressing ▲▼**, and **press SET**.

[Audio attribute 1 type, sampling frequency, bit No. of the disc (see page 59)**]**

LPCM	**96KHz or 48KHz**	**16bit**	**Linear PCM disc**
		20bit	
		24bit	
Dolby Digital	**1ch - 5.1ch**		**Dolby Digital disc**
dts	**1ch - 5.1ch**		**dts disc**

Notes

- If, after several presses of the AUDIO button the language does not change, language selection is not offered on the disc.
- When power is turned on again or disc is removed, language reverts to initial setting. If this language is not recorded on the disc, the language recorded will be heard.

When ⃠ appears on the screen while a button is being pressed, it means that the corresponding operation is prohibited by the unit or the disc.

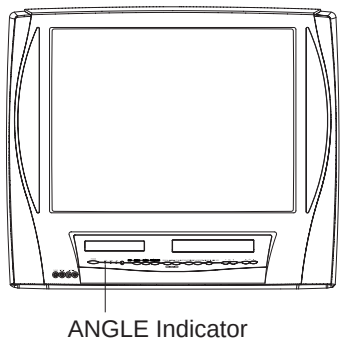

ANGLE Indicator

Notes

- ANGLE Indicator lights up on the unit when a scene recorded at different angles is detected.
- The angle number can be set beforehand so that the angle is switched whenever ANGLE Indicator lights up.

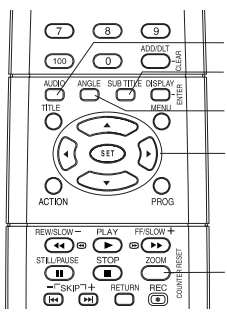

Notes

- Closed captioning will not be displayed while Picture Zoom is used. To see subtitles, set the subtitle feature to ON (see page 48).
- The subtitle cannot be enlarged nor can it's position be changed.
- The picture zoom feature does not work with a Video CD.
- During picture zoom, "ZOOM1" or "ZOOM2" is displayed on-screen.
- Zooming, on some discs, may result in poor picture quality, or may not operate at all.

Multiple Angle Viewing (DVD only)

DVDs may contain scenes shot from multiple camera angles allowing the same scene to be viewed at different angles. You can view these angles, if available, using the ANGLE button.

1

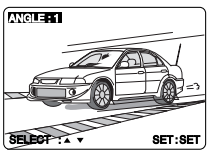

Press ANGLE in Play mode to display the angle selection on-screen.

- Display disappears after 5 seconds.

2

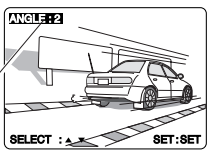

1) **Press ▲▼** to select the desired angle.

Number of angle being played back.

Vocal selection for Karaoke discs (DVD/Video CD)

a **Press AUDIO** in Play mode to display the audio screen.

b

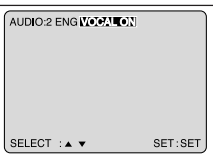

1) **Press ▲▼** (or ◀▶) to select as shown below.
2) **Press ▶** (or ◀) to set. (DVD only)

- DVD Karaoke (1 vocal) VOCAL ON↔VOCAL OFF
- DVD Karaoke (2 vocals) VOCAL V1 + V2→VOCAL V1→VOCAL V2→VOCAL OFF
- Video CD LR→L→R

Picture Zoom (DVD only)

You can enlarge specific portions of a picture and select the zoom ratio using the ZOOM button on the remote during DVD playback.

Set Zoom size.

Press ZOOM repeatedly to change display as follows.

- You can enlarge the center portion of the image to one of 2 magnifications.

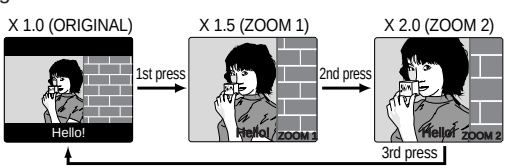

■ Use the ▲, ▼, ◀ and ▶ buttons to move the position up, down, left and right.

Disc Operation (continued)

Title menu (DVD only)

Some DVDs have more than one title, e.g. movies. If the disc offers a title menu, you can select the desired title number. (Operation may vary according to the disc.)

1

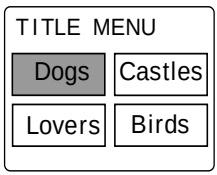

<Example>

Press TITLE* in Play mode to display title screen.

- **Pressing TITLE** again resumes play from the scene when TITLE was first pressed.

2

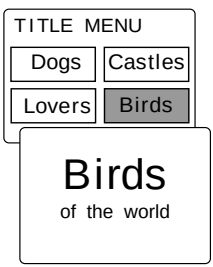

<Example>

1) **Press ▲▼◀▶** or **number Key(s)** to select a title.
2) **Press SET** or **PLAY** to start play.

- Step 2) not necessary when using number key(s).

DVD menu (DVD only)

DVDs may offer a special menu. This menu may include guides to unique contents, audio/subtitle languages, etc. Although contents and operation may vary, the following steps show basic steps for using the menu.

a

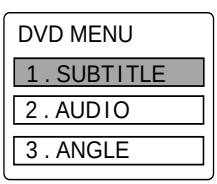

<Example>

Press MENU in Play mode to display DVD menu.

- **Pressing MENU** again resumes play from the scene when MENU was first pressed.

b

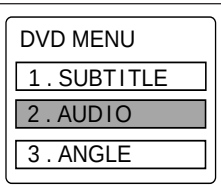

<Example>

1) **Press ▲▼◀▶** or **number key(s)** to select an item.
2) **Press SET** or **PLAY** to access.

- Step 2) not necessary when using number key(s).

Repeat step "b" if there is more than one menu.

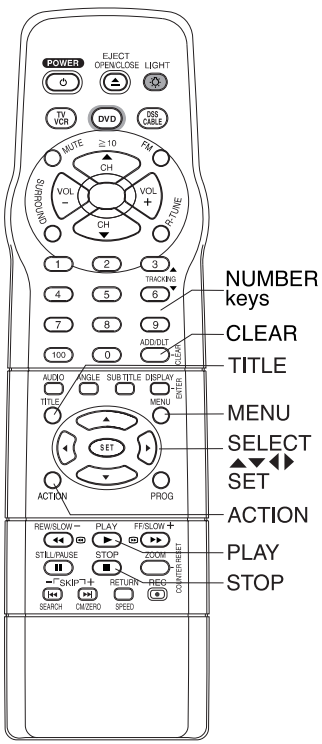

Program Play (Video CD/CD)

You can program specific tracks and order of play.

1 **Press ACTION** in Stop mode to display MAIN MENU.

2

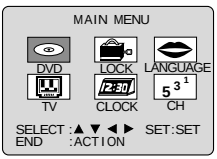

1) **Press ▲▼◀ ▶** to select “DVD.”
2) **Press SET** to display screen.

3

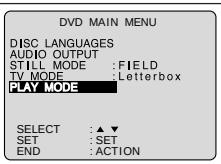

1) **Press ▲▼** to select “PLAY MODE.”
2) **Press SET** to display screen.

4

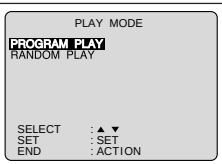

1) **Press ▲▼** to select “PROGRAM PLAY.”
2) **Press SET** to display screen.

5

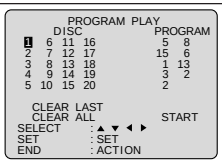

1) **Press ▲▼◀ ▶** to select a track number. (Track numbers on disc are displayed.)
2) **Press SET** to set.

- Repeat step 5 to select another track.
- The selected track is added on the right side.

6

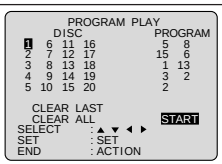

1) **Press ▲▼◀ ▶** to select “START.”
2) **Press SET** to start play of programs in the sequence selected.

- To cancel, **press STOP** during play, then **press CLEAR**.

Notes

- Up to 15 tracks can be programmed.
- “◀ ” or “ ▶” (depending on disc) indicates additional PROGRAM PLAY screen. **Press ▲▼◀ ▶** for next or previous screen.
- **To clear the last program one by one, Press ▲▼◀ ▶** to move to “CLEAR LAST” and **press SET**. (**Pressing CLEAR** also clears last program.)
- **To clear all programs, Press ▲▼◀ ▶** to move to “CLEAR ALL” and **press SET**. (Programs are also cleared when the power is turned off or the disc is removed.)

Ready Checklist

- ☐ Unit is in TV-VCR mode, press TV/VCR.
- ☐ Video CD or CD is inserted.

Program Repeat Play (Video CD/CD)

a **Do steps 1 through 6 on this page.**

b **Press DISPLAY** to display Disc Information screen.

(Disc Information Screen)

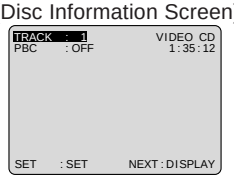

c **Press DISPLAY** again to display Unit Information screen.

d **Press SET** to enter Select mode. (“REPEAT OFF” will flash.)

(Unit Information Screen)

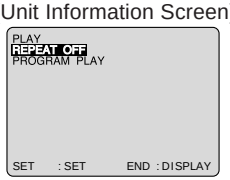

e **Press ▲▼** to select “DISC REPEAT.”

(Unit Information Screen)

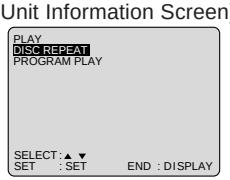

f **Press SET** to set mode. (“DISC REPEAT” stops flashing.)
To cancel, select “REPEAT OFF” in step **e**, then **press SET**.

Random Play (Video CD/CD)

Tracks are played in a random order.

1 **Press ACTION*** in Stop mode to display MAIN MENU.

2

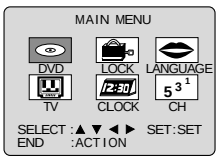

1) **Press ▲▼◄►** to select "DVD."
2) **Press SET** to display screen.

3

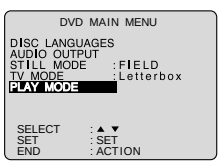

1) **Press ▲▼** to select "PLAY MODE."
2) **Press SET** to display screen.

4

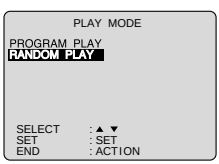

1) **Press ▲▼** to select "RANDOM PLAY."
2) **Press SET** to begin random play.

• To cancel, **press STOP** during play, then **press CLEAR**.

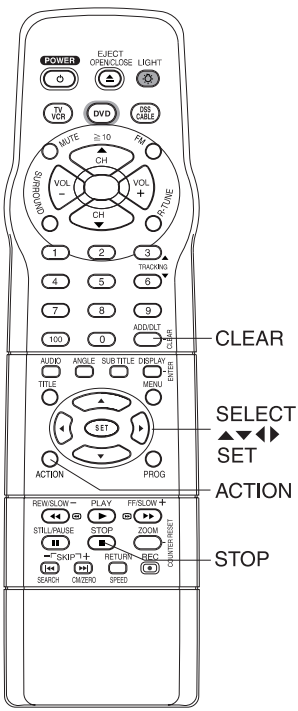

DVD Operation using On-Screen Displays

When DISPLAY is pressed, On-Screen Displays show disc information (title/chapter/track number, elapsed playing time) and unit information (repeat play, Play mode).

Ready Checklist

☐ Unit is in DVD mode, press DVD.

1 **Press DISPLAY** in Play or Stop mode to display "On-Screen Display."

- Each **press** of **DISPLAY** changes the on-screen display as follows. (Please refer to page 54 or 55.)

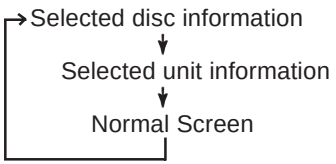

Note

- DISPLAY button does not function while DVD TITLE MENU is displayed.

2 1) **Press ▲▼** (or ◀▶) to select an item.
2) **Press SET** to set.

3 1) **Press ▲▼** to select the setting.
2) **Press SET** to set.

<Example of DVD>

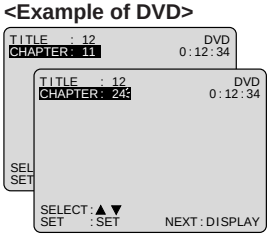

- For some functions the setting will be registered immediately without **pressing SET**.
- When numbers are displayed (e.g. title number), the NUMBER keys are also available.

To make corrections, press ▲▼ and **SET** repeatedly to move to error, then correct.

- **Pressing ▶** is effective for elapsing time instead of the above buttons. **Press ◀** repeatedly to delete the error, then correct.

To return to the normal screen, press CLEAR or **DISPLAY** repeatedly.

<Example of Video CD>

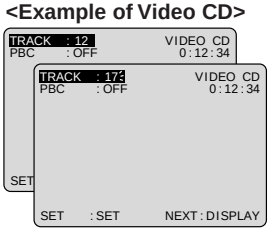

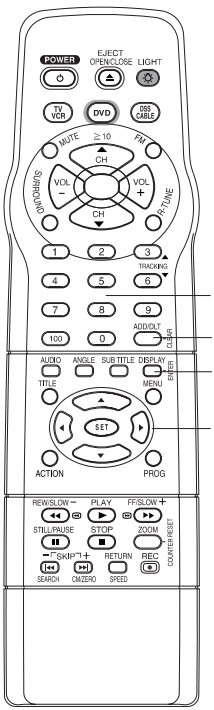

Notes

- When **DISPLAY** is pressed during playback of a Video CD with Playback control, the **NUMBER keys** are not available on the displayed screen. In this case, **press DISPLAY** again to remove the displayed screen.
- When ⃠ appears on the screen while a button is being pressed, it means that the corresponding operation is prohibited by the unit or the disc.

Detailed Descriptions of Each On-Screen Display

Disc information screen (for DVD)

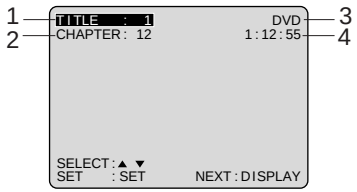

1. TITLE No.

- Change the No. by **pressing ▲▼*** or the **NUMBER keys**, and **press SET**.

2. Chapter No.

- Change the No. by **pressing ▲▼** or the **NUMBER keys**, and **press SET**.

3. Disc currently being played

4. Elapsed playing time

The screen may be changed by selecting the elapsed time.

- Change the elapsed time by **pressing NUMBER keys**, and **press SET**.

(e.g.) 01 : 23 : 45 0 ➛ 1 ➛ 2 ➛ 3 ➛ 4 ➛ 5

- This function does not work with some discs.

Disc information screen (for Video CD/ CD)

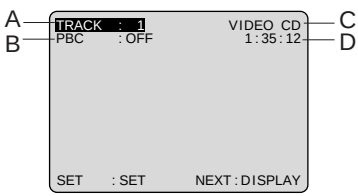

A. Track No.

- Change the No. by **pressing ▲▼** or the **NUMBER keys**, and **press SET**.

B. Playback control ON/OFF

[Video CD with playback control only]

ON	Video CD menu play is displayed.
OFF	Video CD menu play is cleared.

C. Disc currently being played

Video CD	CD

D. Elapsed playing time

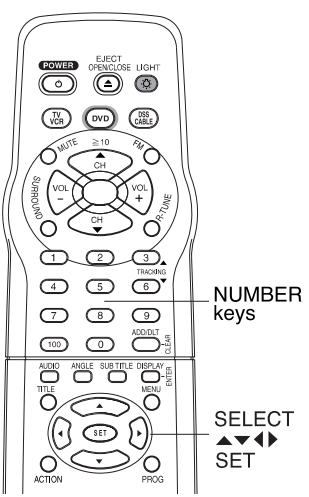

Notes

- Track No. and elapsed playing time are not displayed during play started from menu of Video CDs with playback control.
- When ⃠ appears on the screen while a button is being pressed, it means that the corresponding operation is prohibited by the unit or the disc.

Detailed Descriptions of Each On-Screen Display

Unit information screen

- Change the desired mode during play by **pressing ▲▼**, and **press SET**.

a. Repeat Play

DVD	CHAPTER REPEAT	TITLE REPEAT	REPEAT OFF
Video CD/CD	TRACK REPEAT	DISC REPEAT	REPEAT OFF

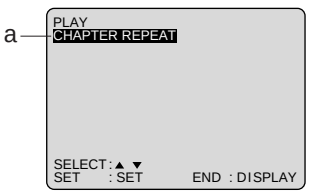

b. Play mode [Video CD/ CD only] (See page 51 or 52.)

PROGRAM PLAY	program play
RANDOM PLAY	random play
-----	normal play

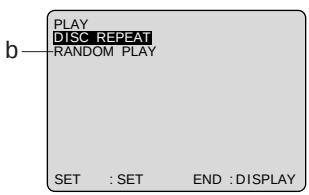

For your reference

• **CHAPTER/TITLE REPEAT PLAY (DVD)**

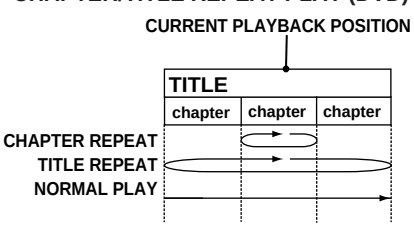

• **TRACK/DISC REPEAT PLAY (Video CD/CD)**

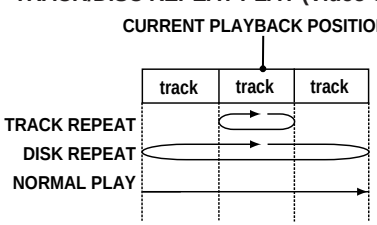

Note

• For repeat play in VCR mode, see page 36.

MP3 Playback Operation

MP3 Playback

You can use this unit to play MP3 format audio recorded for personal use with a computer etc. onto a CD-R or CD-RW. Play may not be possible in some cases due to the condition of the recording.

1 **Press POWER*** on the remote or unit.

2 **Press OPEN/CLOSE,** and then place a MP3 disc into the disc tray.
Press OPEN/CLOSE to close.

3 MP3 MENU is displayed and playback is started automatically. (The MP3 CD directory is displayed.)

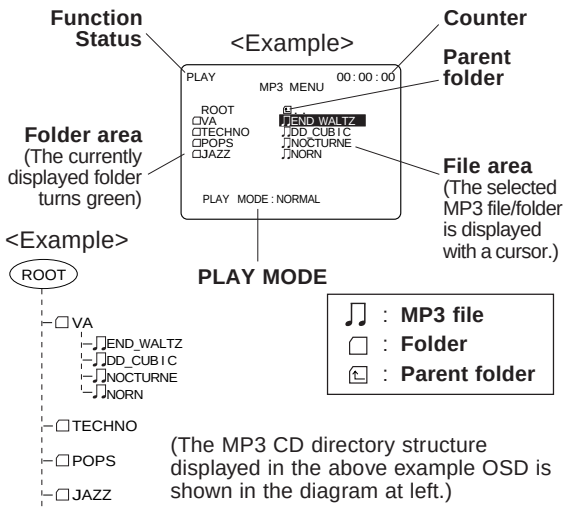

■ **Forward/Reverse Search**
Press FF/SLOW+ or **REW/SLOW-** during play.
Press PLAY to release.
- Search speed, slow at first, increases with each additional press of the button up to 4 levels.

■ **Forward/Reverse Track Skip**
Press SKIP ▶▶| or **|◀◀ SKIP** during play.
Each press skips a track.
- If pressed within first 3 seconds of playback, skips to the previous track. If over 3 seconds, returns to first track. (**|◀◀ SKIP** only.)
- Only the **SKIP ▶▶|** or **|◀◀ SKIP** button can be used for track skip selection during playback. Put unit in Stop mode before performing folder/file selection (see above right.)

4 **Press STOP** to stop playing.

5 **Press OPEN/CLOSE** to eject the disc.
The MP3 MENU is closed automatically.

■ **MP3 playback** (During STOP mode)
1) **Press ▲▼** to select an MP3 file (♫).
2) **Press SET** or **PLAY** to start playback.

■ **Select folder** (During STOP mode)
1) **Press ▲▼** to select a folder (▢).
2) **Press SET** to display files/folders contained in the folder.

■ **Select parent folder** (During STOP mode)
1) **Press ▲▼** to select a folder (⮌).
2) **Press SET** to make changes to the previous directory display.

Note

- Folder area operation cannot be done. Only file area operation is possible.

■ **Select PLAY MODE** (During STOP mode)
1) **Press ◀▶** to move cursor to PLAY MODE.
2) **Press ▲▼** to select the desired PLAY MODE (see below).

[PLAY MODE]

NORMAL:
All MP3 files are selected and played back one time only.

SINGLE REPEAT:
The selected MP3 file is played back repeatedly.

FOLDER REPEAT:
The MP3 files contained in the selected folder are played back repeatedly.
However, folders below the selected folder are not played back.

DISC REPEAT:
All MP3 files are played back repeatedly.

DVD Lock Feature

*Important: If a remote control button does not work when pressed, press the TV/VCR, DVD button on the remote and try the button again.

You can prevent playback of DVDs with a specific rating level which may be unsuitable for children.

- Some DVDs are encoded with a rating level. If the disc rating is higher (stricter) than the one you preset, playback will be prohibited.

Caution

Discs not encoded with a rating level will play even if the jacket states it is for mature audiences. For these discs, the DVD Lock Ratings will not work.

DVD Lock Ratings (DVD only)

Perform DVD Lock setting in TV mode.
Enter your secret code to display LOCK menu.
(Perform "Enter Secret Code" steps on page 40.)

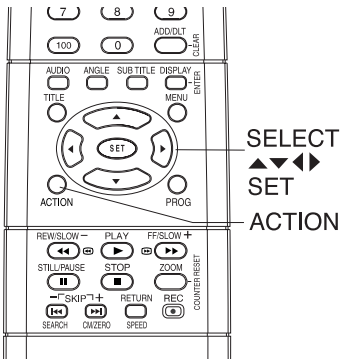

1

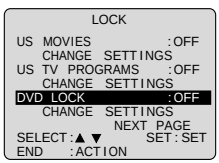

1) **Press ▲▼** to select "DVD LOCK."
2) **Press SET** to set "ON" or "OFF."

■ **"ON" ➔ DVD Lock is activated.**
■ **"OFF" ➔ DVD Lock is deactivated.**

2

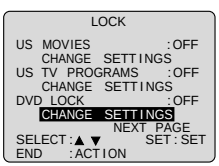

1) **Press ▲▼** to select "CHANGE SETTINGS."
2) **Press SET** to display screen.

3

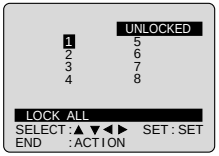

1) **Press ▲▼◀▶** to select rating level.
2) **Press SET** to select "LOCKED" or "UNLOCKED."

LEVEL 1 : LOCK ALL:
Playback of all DVDs, CDs and Video CDs is prohibited. (Use to prohibit play of mature theme DVDs not encoded with a rating level.)
LEVEL 2 : DVDs expressly for children can be played back.
LEVEL 3 to 7 :
DVDs for general audiences/children can be played back. (DVDs with mature content are prohibited.)
LEVEL 8 : NO LIMIT: (Factory preset)
All DVDs can be played back.

- Ratings which are highlighted in Green will be blocked; those not highlighted (white letters) will not be blocked.

4 **Press ACTION** three times to end setup.

<When DVD Lock is activated>

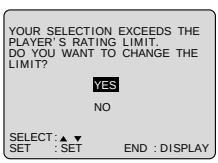

After DVD Lock is set and a blocked DVD is played, this message will appear. The message may differ depending on the disc.

To continue viewing a blocked program for now,
Press ▲▼ to select "YES" and **SET**. Then, enter your 4-digit secret code. When "NO" is selected, blocked programs cannot be viewed.

To change DVD LOCK settings
After entering your secret code in step 3 on page 40, select "OFF" to deactivate DVD Lock or change the rating level.

Settings for DVD Operation

1 **Press ACTION*** in Stop mode to display MAIN MENU.

2

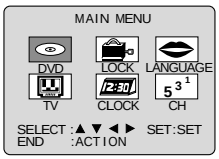

1) **Press ▲▼◄►** to select "DVD."
2) **Press SET** to display screen.

3

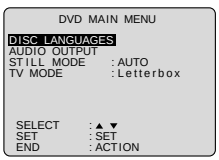

1) **Press ▲▼** to select an item.
2) **Press SET** to set.

DISC LANGUAGES (See below.)
Any languages offered on the disc can be set. If a language not offered is set, the original disc language will be selected.

AUDIO OUTPUT (See page 59.)
You can set the audio output that comes from the digital audio output terminal.

STILL MODE (See page 60.)
To select "FIELD" or "FRAME" to prevent jitter or to make small text or fine patterns clearly visible in a still picture. When "AUTO" is set, "FIELD" or "FRAME" is selected automatically.

TV MODE (See page 60.)
To select whether the video material for a wide-screen will be played back in Pan & Scan style or in Letterbox style.

DISC LANGUAGES (DVD only)

To select and set the language of the audio soundtrack, subtitles, or title/DVD menus for all discs to be played.

4

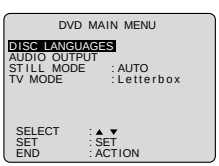

1) **Press ▲▼** to select "DISC LANGUAGES."
2) **Press SET** to display screen.

5

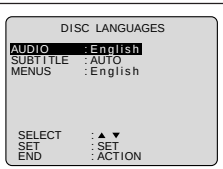

1) **Press ▲▼** to select an item.
2) **Press SET** repeatedly for desired language. (Please refer right.)

6 **Press ACTION** to redisplay DVD menu and go to step 3 to setup another item. Or, **press ACTION** three times to exit.

Once initial settings are done, they remain in memory (even after the power is off) until changed.
This means the unit will always operate under the same conditions (especially DVDs) each time.

Ready Checklist

☐ Unit is in TV-VCR mode, press TV/VCR.

"AUDIO" selections

To select the audio soundtrack language.
(factory preset: English)
English/Spanish/French/Japanese
Original: Original disc language
OTHER ✱✱✱✱: Other language selection*1

"SUBTITLE" selections

To select the subtitle language.
(Factory preset: AUTO)
AUTO: Same language selected for "AUDIO"
- If language set for "AUDIO" is used in playback, subtitles will not appear.
- If another language is used during playback, the subtitles will appear in the language selected at "AUDIO" setup.

English/Spanish/French/Japanese
OTHER ✱✱✱✱: Other language selection*1

"MENUS" selections

(factory preset: English)
To select the language used in title menus or DVD menus.
English/Spanish/French/Japanese
OTHER ✱✱✱✱: Other language selection*1

To enter OTHER ✱✱✱✱ code number, Press number keys (Please refer to language codes on page 61).
To make corrections, **press ◄** repeatedly to delete language code number, and correct.

*1 If the selected language is not offered, the original disc language is selected.

*Important: If a remote control button does not work when pressed, press the TV/VCR, DVD button on the remote and try the button again.

AUDIO OUTPUT

Select the digital output to be output from the optical digital audio output connector of the unit.

1 **Do steps 1 and 2 on page 58.**

2

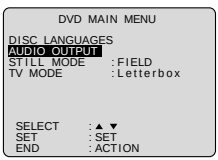

1) **Press ▲▼** to select "AUDIO OUTPUT."
2) **Press SET** to display screen.

3

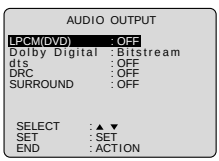

1) **Press ▲▼** to select an item.
2) **Press SET** repeatedly for output. (See below.)

■ "LPCM (DVD)" selections

OFF: Linear PCM of less than 48 kHz/16 bit is output. When playing DVDs recorded in linear PCM of over 48 kHz/20 bit or 96 kHz, no digital audio is output. (Factory preset)

PCM: When playing DVDs recorded in linear PCM of 48 kHz/20 bit/24 bit or 96 kHz, digital audio converted to 48 kHz/16 bit is output. (Digital output of PCM audio is restricted to 48 kHz/16 bit or below for copyright protection.)

■ "Dolby Digital" selections

Bitstream: Dolby Digital bitstream (1ch-5.1ch) is output. (Factory preset)

OFF: No output.

■ "dts" selections

Bitstream: dts bitstream is output. (Factory preset)

OFF: No output.

■ "DRC (Dynamic Range Compression)" selections

OFF: Normal audio range is selected. (Factory preset)

ON: For dynamic sound even at low volume, this is useful for late-night listening. [Dolby Digital DVDs only].

■ "SURROUND" selections

Surround Sound creates the effect of sound coming from non-existent rear speakers even when only connected to a 2-channel stereo system.

OFF: No Surround Sound effect. (Factory preset)

ON: Surround Sound effect.

4 **Press ACTION** to redisplay DVD menu and go to step 2 to setup another item. Or, **press ACTION** three times to exit.

Type of amplifier to be connected	Recommended setting		
	LPCM (DVD)	Dolby Digital	dts
No amplifier is connected	OFF	OFF	OFF
AV amplifier (with digital audio input connector) without Dolby Digital/dts decoder	PCM*1	OFF*2	OFF*2
AV amplifier including Dolby Digital decoder	PCM*1	Bitstream	OFF
AV amplifier including Dolby Digital/dts decoder	PCM*1	Bitstream	Bitstream*3

- Make settings according to amplifier connected to optical audio output as shown in above table.
- When a dts decoder is not connected, to enjoy dts DVD, please select audio output other than dts on the dts DVD menu screen. Otherwise, there will be no sound from the unit speakers.

*1 Audio output from unit is converted to 48 kHz/16 bit in addition to audio from digital audio output.
To enjoy high quality sound at 48 kHz/20 bit / 24 bit or 96 kHz, connect the amplifier or decoder directly to the audio output connectors, not to the digital audio output connector. [Select "OFF" at the "LPCM (DVD)".]

*2 When connecting an amplifier (with an optical digital input connector) which does not contain the Dolby Digital or dts decoder, be sure to select "OFF".
If "Bitstream" is selected, starting DVD play may cause such a high level of noise as to be harmful to your ears and damage the speakers.

*3 When a dts decoder is connected, please select "Bitstream" in "dts". If "OFF" is selected, there will be no sound.

Notes

- Turn off other surround effects when using this surround effect.
- For optimum effect, the distance between the unit and the listener should be about 3 or 4 times the distance between the right and left front speakers.

STILL MODE

Set to reduce jitter in a displayed still picture or a motion picture.

1 **Do steps 1 and 2 on page 58.**

2

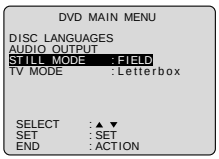

1) **Press ▲▼*** to select "STILL MODE."
2) **Press SET** repeatedly for mode. (See below)

AUTO: "FIELD" (Field still) or "FRAME" (Frame still) is automatically selected during the still mode. (Factory preset)

FIELD: "FIELD" (Field still) is always selected. This setting will reduce jitter when compared with "AUTO" on some discs.

FRAME: "FRAME" (Frame still) is always selected. Some texts and fine patterns will be seen clearly when compared with "AUTO" on some discs.

3 **Press ACTION** twice to exit this mode.

Selecting TV MODE

Set the screen display style for widescreen video material playback.

a **Do steps 1 and 2 on page 58.**

b

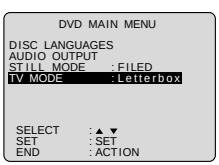

1) **Press ▲▼** to select "TV MODE."
2) **Press SET** repeatedly for mode. (See below.)

Pan & Scan : (Factory preset) Widescreen video data is played in Pan & Scan style (left and right of screen is trimmed.)
- Video data not formatted in Pan & Scan will play in letterbox style.

Letterbox : Widescreen video data is played in Letterbox style (top and bottom of screen has black margin).

C **Press ACTION** twice to exit this mode.

*Important:
If a remote control button does not work when pressed, press the DVD button on the remote and try the button again.

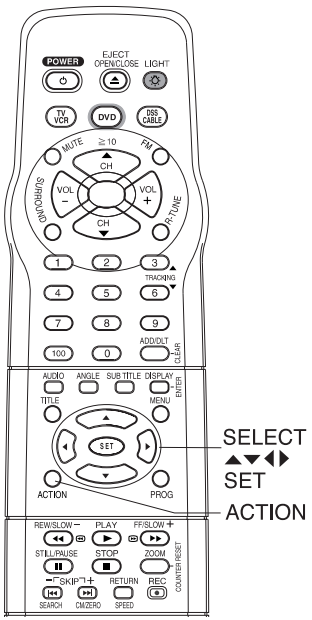

Example

• Pan & Scan (Factory preset)

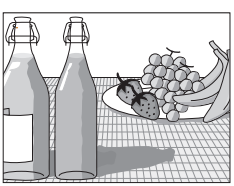

• Letterbox

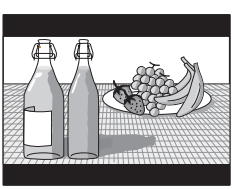

Language Code List

Enter the appropriate code number for the initial settings “AUDIO”, “SUBTITLE” and/or “MENUS” (see page 58).

Code	Language
6565	Afar
6566	Abkhazian
6570	Afrikaans
6577	Ameharic
6582	Arabic
6583	Assamese
6588	Aymara
6590	Azerbaijani
6665	Bashkir
6669	Byelorussian
6671	Bulgarian
6672	Bihari
6678	Bengali;Bangla
6679	Tibetan
6682	Breton
6765	Catalan
6779	Corsican
6783	Czech
6789	Welsh
6865	Danish
6869	German
6890	Bhutani
6976	Greek
6978	English
6979	Esperanto
6983	Spanish
6984	Estonian
6985	Basque
7065	Persian
7073	Finnish
7074	Fiji

Code	Language
7079	Faroese
7082	French
7089	Frisian
7165	Irish
7168	Scots Gaelic
7176	Galician
7178	Guarani
7185	Gujarati
7265	Hausa
7273	Hindi
7282	Croatian
7285	Hungarian
7289	Armenian
7365	Interlingua
7378	Indonesian
7383	Icelandic
7384	Italian
7387	Hebrew
7465	Japanese
7473	Yiddish
7487	Javanese
7565	Georgian
7575	Kazakh
7576	Greenlandic
7577	Cambodian
7578	Kannada
7579	Korean
7583	Kashmiri
7585	Kurdish
7589	Kirghiz
7665	Latin

Code	Language
7678	Lingala
7679	Laothian
7684	Lithuanian
7686	Latvian, Lettish
7771	Malagasy
7773	Maori
7775	Macedonian
7776	Malayalam
7778	Mongolian
7779	Moldavian
7782	Marathi
7783	Malay
7784	Maltese
7789	Burmese
7865	Nauru
7869	Nepali
7876	Dutch
7879	Norwegian
7982	Oriya
8065	Panjabi
8076	Polish
8083	Pashto, Pushto
8084	Portuguese
8185	Quechua
8277	Rhaeto-Romance
8279	Romanian
8285	Russian
8365	Sanskrit
8368	Sindhi
8372	Serbo-Croatian
8373	Singhalese

Code	Language
8375	Slovak
8376	Slovenian
8377	Samoan
8378	Shona
8379	Somali
8381	Albanian
8382	Serbian
8385	Sundanese
8386	Swedish
8387	Swahili
8465	Tamil
8469	Telugu
8471	Tajik
8472	Thai
8473	Tigrinya
8475	Turkmen
8476	Tagalog
8479	Tonga
8482	Turkish
8484	Tatar
8487	Twi
8575	Ukrainian
8582	Urdu
8590	Uzbek
8673	Vietnamese
8679	Volapük
8779	Wolof
8872	Xhosa
8979	Yoruba
9072	Chinese
9085	Zulu

Before Requesting Service

Check the following points once again if you are having trouble with your unit.

Power	Correction
No power…	• Completely insert Power Plug into an AC outlet. • Set POWER button to ON.
Power turns itself off...	• Auto power-off (shut off) occurs after about 5 min. in DVD mode with no operation, or if there is no broadcast signal in TV or Playback mode. Turn the power back on. (P. 21, 37)
Monitor	**Correction**
No picture or sound...	• Make sure your antenna system (TV or CABLE), is correctly set. (P. 11) • Completely insert Power Plug into an AC outlet. • Set POWER button to ON.
Poor picture with normal sound...	• Adjust BRIGHTNESS, SHARPNESS, and PICTURE controls in the SET UP Video Adjustment. (P. 47)
Poor sound with normal picture...	• Adjust VOLUME control. (P. 22)
Poor TV reception...	• Adjust SHARPNESS and PICTURE controls in the SET UP Video Adjustment. (P. 47)
No color or poor color...	• Adjust TINT and COLOR controls in the SET UP Video Adjustment. (P. 47)
Ghost (multiple) images...	• Install a directional antenna.
TV programs cannot be watched...	• Make sure the selected channel is in unit's memory. (P. 16)
Channel cannot be selected...	• Only the channel begin recorded can be viewed on this unit.
VCR	**Correction**
TV program cannot be recorded...	• Make sure your antenna system (TV or CABLE), is correctly set. (P. 11) • Make sure cassette record tab is intact. (P. 4)
Timer recording cannot be performed…	• Check that clock is set to current time and date. • Make sure DSS/CABLE box (if used) is left on and tuned to channel to be recorded. • Set recording Start/Stop times correctly. (P. 30, 31) • Timer recording may not be performed or continued if a power interruption of more than 1 minute occurs before or during a Timer Recording, even after power is restored.
No playback picture, or the playback picture is noisy or contains streaks...	• Adjust TRACKING control in either direction. (P. 6) • Try Head Cleaning. (P. 6)
VCR cannot be controlled...	• Make sure VCR LOCK is set to off. (P. 39)
Remote Control	**Correction**
Unit cannot be controlled...	• Aim Remote directly at the remote sensor on the unit. (P. 10) • Avoid any object blocking signal path. • Inspect the remote batteries. (P. 4) • Make sure VCR LOCK is set to off. (P. 39) • Exposing unit remote sensor to direct fluorescent or outdoor light may cause signal interference.
ACTION, PLAY, SELECT, SET POWER, etc. buttons cannot be selected...	• Press TV/VCR for TV-VCR mode. (P. 32) • Press DVD for DVD mode. (P. 32) • Press FM for FM mode. (P. 32) • Check remote batteries.

DVD/Video CD/CD	Correction
Play fails to start even when PLAY is pressed...	• This unit cannot play discs other than DVDs, Video CDs and CDs. • The disc may be dirty and require cleaning.
Play starts but then stops immediately...	• Be sure disc is installed with label side up.
Picture is distorted during rapid advance or rapid reverse...	• The picture will be somewhat distorted at times: this is normal.
No Forward/Reverse search play...	• Some discs may have sections which prohibit Forward/ Reverse search. (P. 21)
Play does not start even when title is selected...	• Confirm the “DVD LOCK” setting. (P. 57)
Audio soundtrack and/or subtitle language is not the one selected at the initial settings...	• If the audio soundtrack and/or subtitle language selected at DVD initial settings does not exist on the disc, it will not be accessible.
No subtitles...	• Subtitles appear only when available on disc. • Select “ON” at the “Subtitle language” section (P. 48) to display subtitles.
Alternative audio soundtrack (or subtitle) language cannot be selected...	• Alternative language cannot be selected with discs which do not contain more than one language. • For some discs, alternative language cannot be selected with the AUDIO or SUB TITLE button. Try selecting it from the DVD menu if available.
Angle cannot be changed...	• This function is dependent on software availability. Even if disc has multiple angles, they may be recorded for specific scenes only (ANGLE Indicator on unit lights up). (P. 49)

Miscellaneous	Correction
Video cassette cannot be inserted...	• Insert the cassette window side up; record tab facing you.
Video cassette cannot be removed...	• Completely insert Power Plug into an AC outlet.
Eject does not function or insertion cannot be done...	• Turn the POWER off and then on, and try ejecting or inserting the tape again.
Video cassette ejects when a recording is started, or the power is turned off for timer recording...	• Make sure cassette record tab is intact. (P. 4)
The disc cannot be removed...	• First, unplug unit. Then, prepare a rigid wire (e.g. an extended paper clip, etc.) and, applying moderate force, insert it straight into the hole at the base of the tray. The tray will eject a little. Now, pull the tray all the way out and remove the disc. (P. 10)
In Stop mode, the VCR motor (CYLINDER) continues to rotate...	• To enable Quick Play mechanism, the VCR cylinder will rotate for about 3 minutes. This reduces response time from Stop to Play mode and from Play to Rewind Search mode.

Warning and Instruction Displays

Check the following points once again if you are having trouble with your unit.

OSD	Caution	Page
PLEASE SET CLOCK BEFORE PROGRAMMING	If you attempt to set or review a Timer Recording or set the On-Timer and the Clock is not set...	**16, 17**
CHECK CASSETTE RECORD TAB	If you press REC, and a cassette is inserted with no record tab...	**4, 18**
TO CANCEL TIMER REC HOLD DOWN STOP KEY FOR APPROX 3 SEC	If you press STOP during a Timer Recording...	**31**
NO CASSETTE PLEASE INSERT A CASSETTE	If you press PLAY, FF, REW, or REC without a cassette inserted...	**18**
PLEASE PREPARE FOR TIMER REC	If the unit is not in Stop mode or a cassette with record tab is not inserted two minutes before a Timer Recording is about to begin...	**30, 31**

OSD	Caution	Page
VIDEO HEADS MAY NEED CLEANING PLEASE INSERT HEAD CLEANING CASSETTE OR REFER TO MANUAL END: PLAY	If head cleaning becomes necessary while playing back a tape...	**6**
VCR LOCK ACTIVATED	If you press a function button other than STOP/EJECT or POWER while the unit is in VCR Lock mode...	**39**
PLEASE CHECK THE DISC, AND FOR STAINS OR SCRATCHES ON DISC	If you press PLAY, or the unit reads data from a stained or scratched disc in DVD mode. Also, if the type of disc is other than DVD, Video CD or CD...	**7**
IT IS PROHIBITED TO COPY DVD/ VIDEO CD/CD TO VHS	If you press REC in DVD mode...	**18, 19**

Index

TV / VCR

A Accessories 4
AC Power Plug 11
ACTION button 8, 16
ADD / DLT / CLEAR button 8, 17
Audio Adjustment 47
Audio Auto Gain Control (AGC) 46
AUDIO button 8, 23
Audio Connections 12
Audio Features 46, 47
Audio Menu 46
Audio Mode for FM Radio 29
Audio Mode for Playback 44
Audio Mode for Recording 44
Audio Mode for TV Viewing 23
Audio Mute 22
Audio / Video Input connector (LINE) 10, 19
Audio Output Connector (L/R) 11, 12
Auto Operation Functions 37
B Batteries 4
Before Requesting Service 62, 63
Before Using 4
Blocking Message 43
Blue Screen Display 27
Broadcast Types 23
C Cable Box Brand Code Number 33
Cable Box Universal Remote Control Feature 32
Cassette Compartment 10
Caption On Mute 25
Channel 14, 16, 17, 27
Channel Caption 38
CHANNEL UP / DOWN button 22
Clock 16
Closed Caption 24, 25
CM SKIP / ZERO SEARCH button ... 8, 36, 37
Code Numbers, DSS / Cable Box Brand .. 33
Commercial Skip 37
Connections 11
Connections, Audio 12
Connections, DSS / Cable Box 11
Connections, Outdoor Antenna 11
Copy Your Tapes (Dubbing) 19
COUNTER RESET button 8, 36
D DISPLAY / ENTER button 8, 27, 32
DSS Brand Code Number 33
DSS CABLE button 8, 32
DST (Daylight Saving Time) 6
E EJECT button 8, 9
Eject tape 18
F Fast Forward 18
FF/SLOW+ button 8, 18
FM button 8, 28, 29
FM Radio 28, 29
Forward Search 18
Frame by Frame Advance 18
Front Panel Indicators 9
Function Display 27
H Head Cleaning 6
I Important Safeguards and Precautions 2
Information (Unit, Cassette, Disc) ..... 6 - 7
Initial Setup 14
Index Search 34
Indicators on the Front Panel 9
Input Mode 19
L Language 14, 16
LIGHT button 8, 9
Location of Controls ..... 8 - 11
M MTS Broadcast / TV Stereo System 23
MUTE button 8, 22
N NUMBER keys 8, 22
O 100 Key 22
One Touch Recording (OTR) 18
On-Screen Display (OSD) 27
ON-TIMER with Alarm 26
P Phones 22
Playback 18
PLAY button 8, 18
POWER button 8, 14
PROG button 8, 26, 30
Program End Search 35
PROG TIMER Indicator 9, 26, 30
Q Quality Picture 6
R Rapid Tune 22
R-TUNE button 22
REC button 8, 18
REC Indicator 9, 18
Rec(ord) 18
Record / Playback Speed Settings 4
Remote Control Buttons 8
Remote Sensor 9
Remote Warning Feature 39
Repeat Play 36
Reset Language, Channels, Clock ... 16, 17
Reset unit 15
Reverse Search 18
REW/SLOW- button 8, 18
Rewind 18
S Safety Precautions 3
SEARCH button 8, 34, 35
Secret Code 40
Selecting Input Mode 19
SELECT / SET button 8, 16
Sleep Timer 26
Slow Motion 18
Special VCR Features 38, 39
Specifications 6
SPEED button 8, 18
Still Picture 18
STILL / PAUSE button 8, 18
STOP button 8, 18
SURROUND button 8, 45
Surround Sound 45

TV / VCR

T Table of Contents 5
Tape Erasure Prevention 4
Tape Operation ..... 34 - 37
Timer Program Review, Replace, Clear ... 31
Timer Recording 30
Timer Recording Cancellation 31
Time Zone Adjust 17
TRACKING / V-LOCK buttons 6, 8
TV Operation 22
TV Timer Features 26
TV - VCR button 8, 32
TV/VCR Status & Clock Display 27
U Unit, Front/Rear View ..... 9 - 11
Universal Remote Control 32
US MOVIES Ratings 41
US TV PROGRAMS Ratings 42
V VCR Lock 39
Video Adjustment 47
Video Menu 46
V-Chip Control Feature ..... 40 - 43
VHF / UHF Antenna Input Terminal 11
VOLUME UP / DOWN button 8, 22
W Warning and Instruction Displays 64, 65
Weak Signal Display Feature 39
Z Zero Search 36

DVD

A ANGLE button 8, 49
ANGLE Indicator 9, 49
Auto-Power Off function 21
AUDIO button 8, 48
AUDIO OUTPUT 59
Audio soundtrack language (DVD) 48
B Basic DVD Operation 20
C CLEAR button 8, 51, 52, 53
D Definition of terms 7
Disc Audio attribute 1 type, sampling frequency, bit No. 48
Disc format 7
Disc handling 7
Disc information screen 54
DISC LANGUAGES (DVD) 58
Disc Operation ..... 48 - 52
Disc Tray 7, 10, 20
DISPLAY button 8, 53
DVD button 8, 20
DVD Lock Feature (DVD) 57
DVD Lock Ratings (DVD) 57
DVD menu (DVD) 50
DVD Operation using On-Screen Displays .. 53
DVD Volume Adjust 45
F FF button 8, 20
Forward / Reverse Chapter / Track skip .. 21
Forward / Reverse rapid scene search ... 21
Frame by Frame picture (DVD/Video CD) 21
K Karaoke (DVD/Video CD) 49
L Language Code List 61
M MENU button 50
MP3 Playback Operation 56
Multiple angle viewing (DVD) 49
O OPEN / CLOSE button 8, 20
Optical digital audio output connector .. 11, 13
P Picture Zoom (DVD) 49
Play 20
Playback control (Video CDs) 21
PLAY button 8, 20
Program Play (Video CD/CD) 51
Program Repeat Play (Video CD/CD) 51
R Random Play (Video CD/CD) 52
Region number 3
Repeat Play 55
RESUME function 21
RETURN button 8, 20
REW button 8, 20
S Settings for DVD Operation 58
SKIP + / - button 8, 20, 21
Slow Motion (DVD/Video CD) 21
SLOW + / - button 8, 21
STILL MODE 60
Still (Pause) Picture 21
STILL / PAUSE button 8, 21
Subtitle language (DVD) 48
T TV MODE 60
Title menu (DVD) 50
U Unit information screen (Unit) 55
Z ZOOM button 8, 49

Panasonic

Broadcast & Digital Systems Company

Panasonic Broadcast & Television Systems Company
Division of Matsushita Electric Corporation of America

Executive Office:
One Panasonic Way 4E-7, Secaucus, NJ 07094 (201) 348-7000

Eastern Zone:
One Panasonic Way 4E-7, Secaucus, NJ 07094 (201) 348-7621

Central Region:
1707 N Randall Road E1-C-1, Elgin, IL 60123 (847) 468-5200

Western Zone:
3330 Cahuenga Blvd W, Los Angeles, CA 90068 (323) 436-3500

Government Marketing Department:
52 West Gude Drive, Rockville, MD 20850 (301) 738-3840

Matsushita Electric Corporation of America
Corporate Sales Group, Hawaii Region
99-859 Iwaiwa ST., Alea, HI 96701-3267 (808) 488-7779

Panasonic Canada Inc.
5770 Ambler Drive, Mississauga, Ontario L4W 2T3 (905) 624-5010

Panasonic Sales Company
Division of Matsushita Electric of Puerto Rico, Inc.
Ave. 65 de infantería. Km. 9.5 San Gabriel Industrial Park, Carolina, PR 00985
(787) 750-4300

Printed in U.S.A.
LSQT0620A
M0602-0

POWER SUPPLY BLOCK DIAGRAM

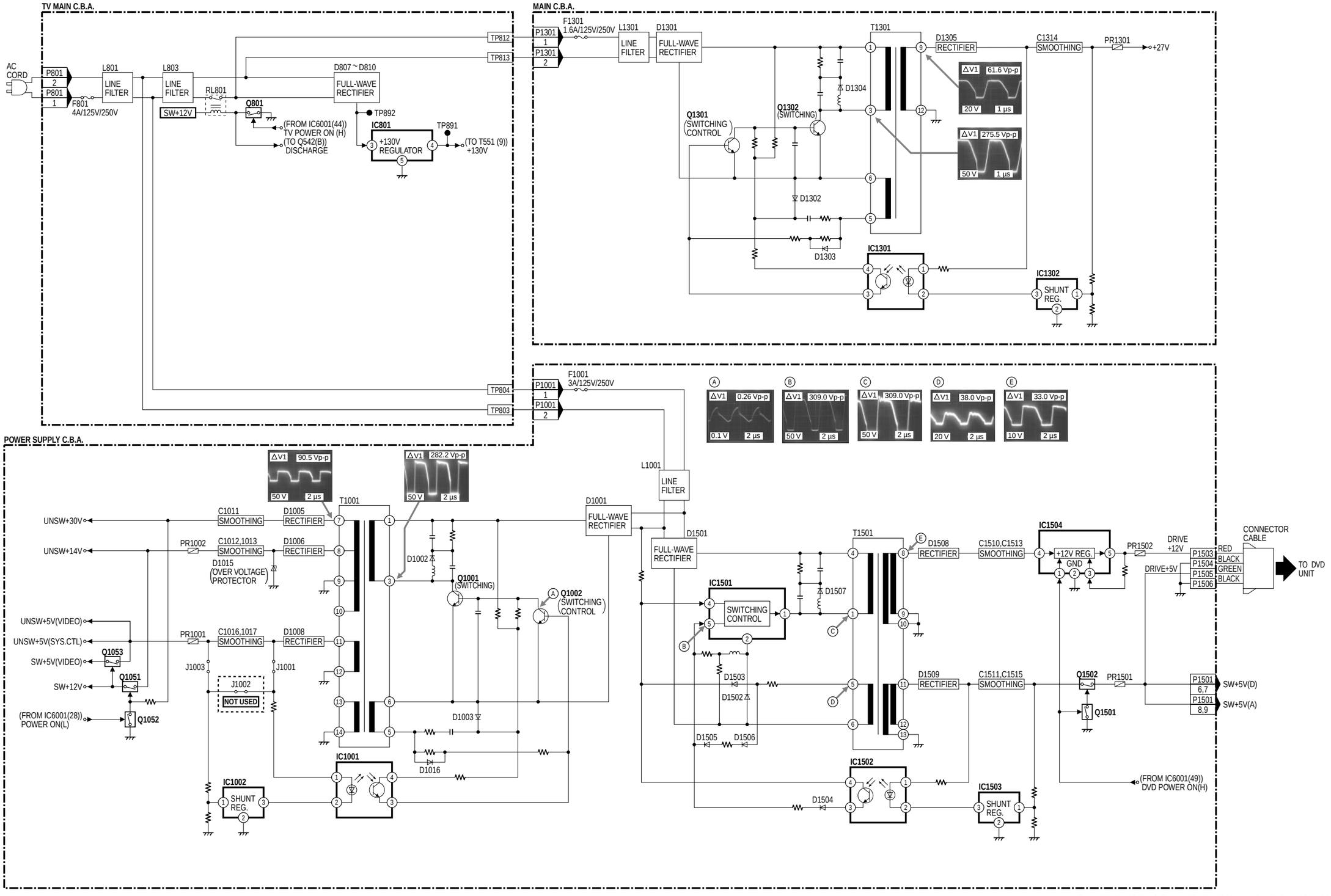

AG-527DVDE POWER SUPPLY BLOCK DIAGRAM

VIDEO SIGNAL PATH BLOCK DIAGRAM

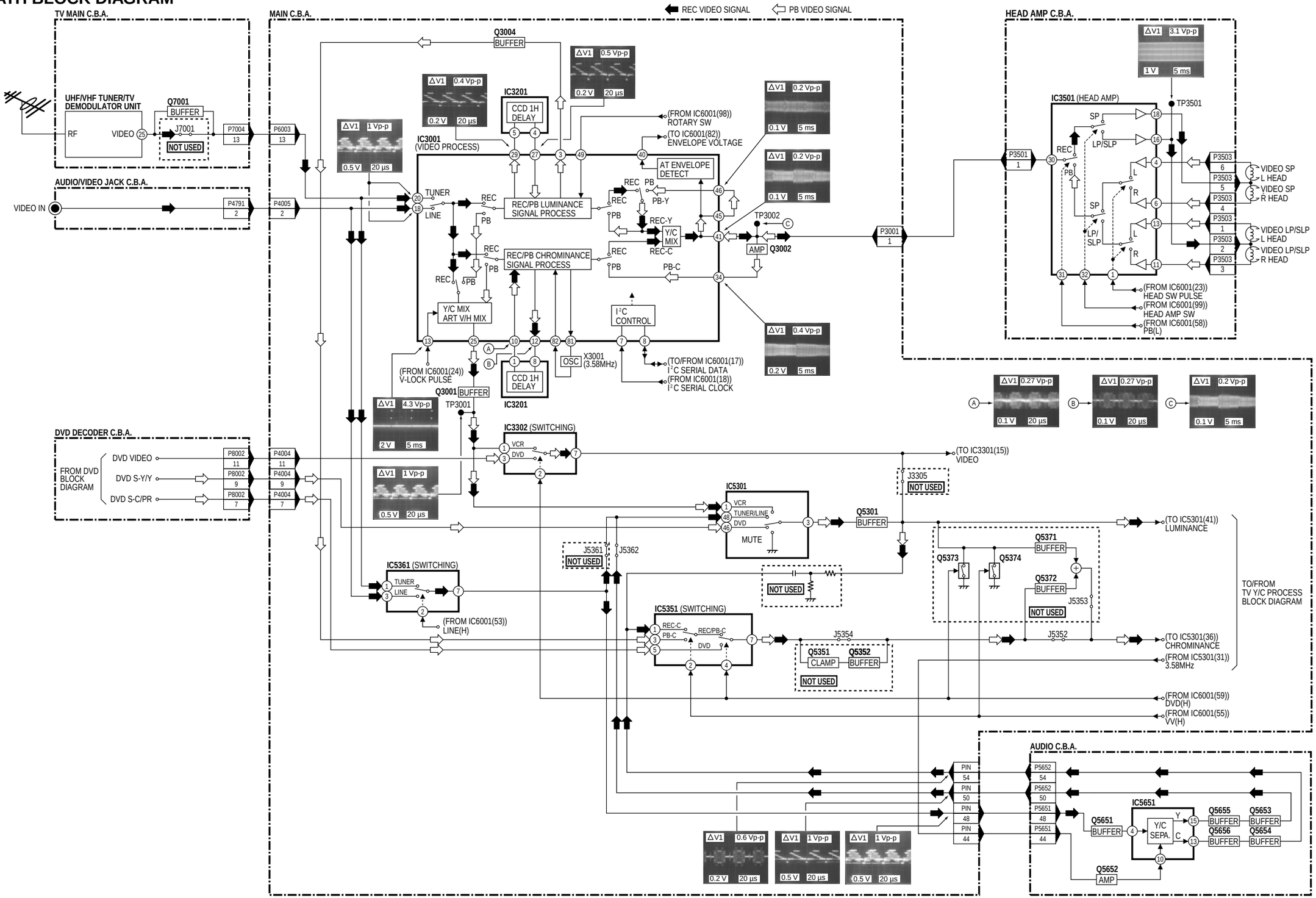

AG-527DVDE VIDEO SIGNAL PATH BLOCK DIAGRAM

AUDIO SIGNAL PATH BLOCK DIAGRAM

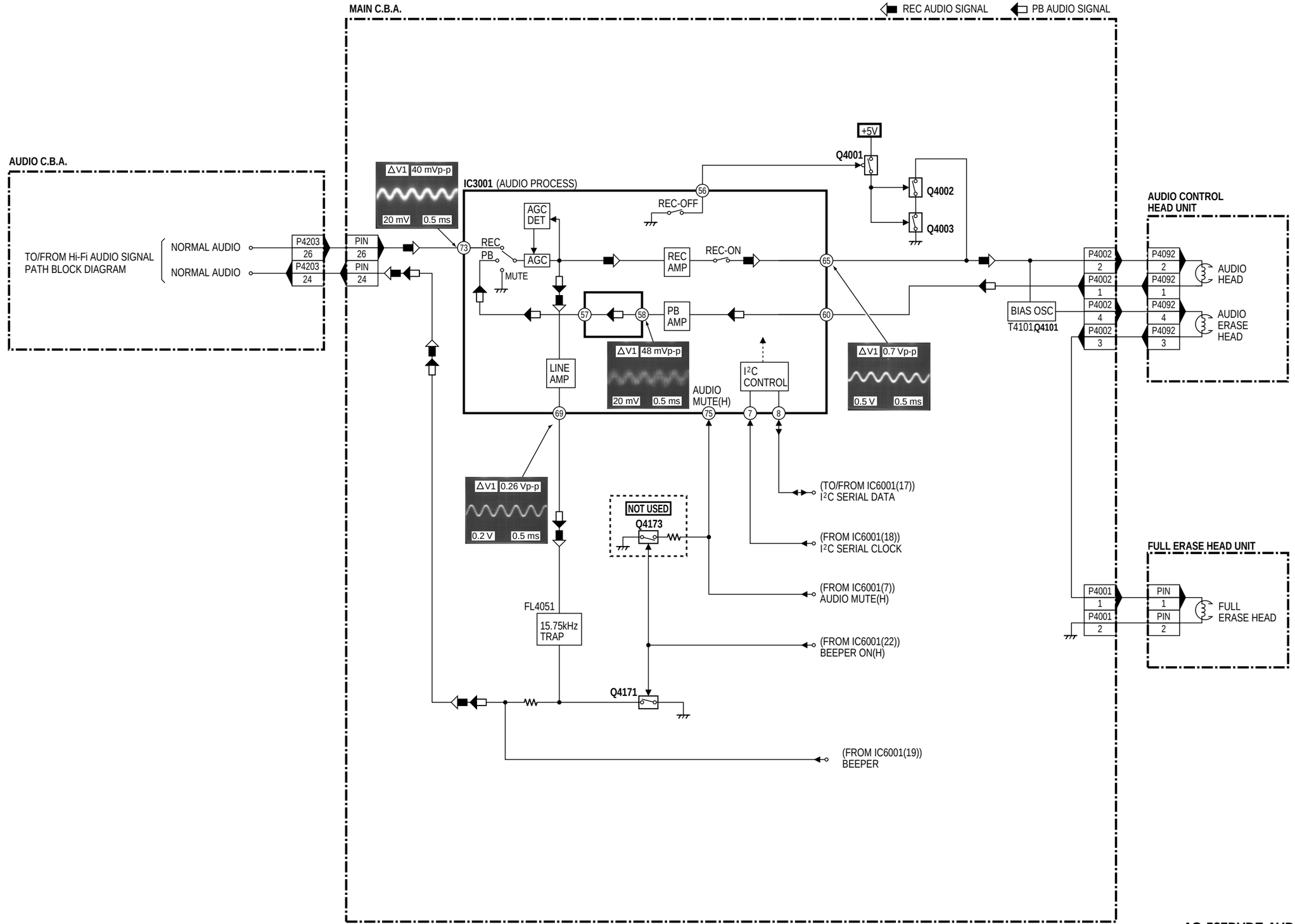

TV STEREO SIGNAL PATH BLOCK DIAGRAM

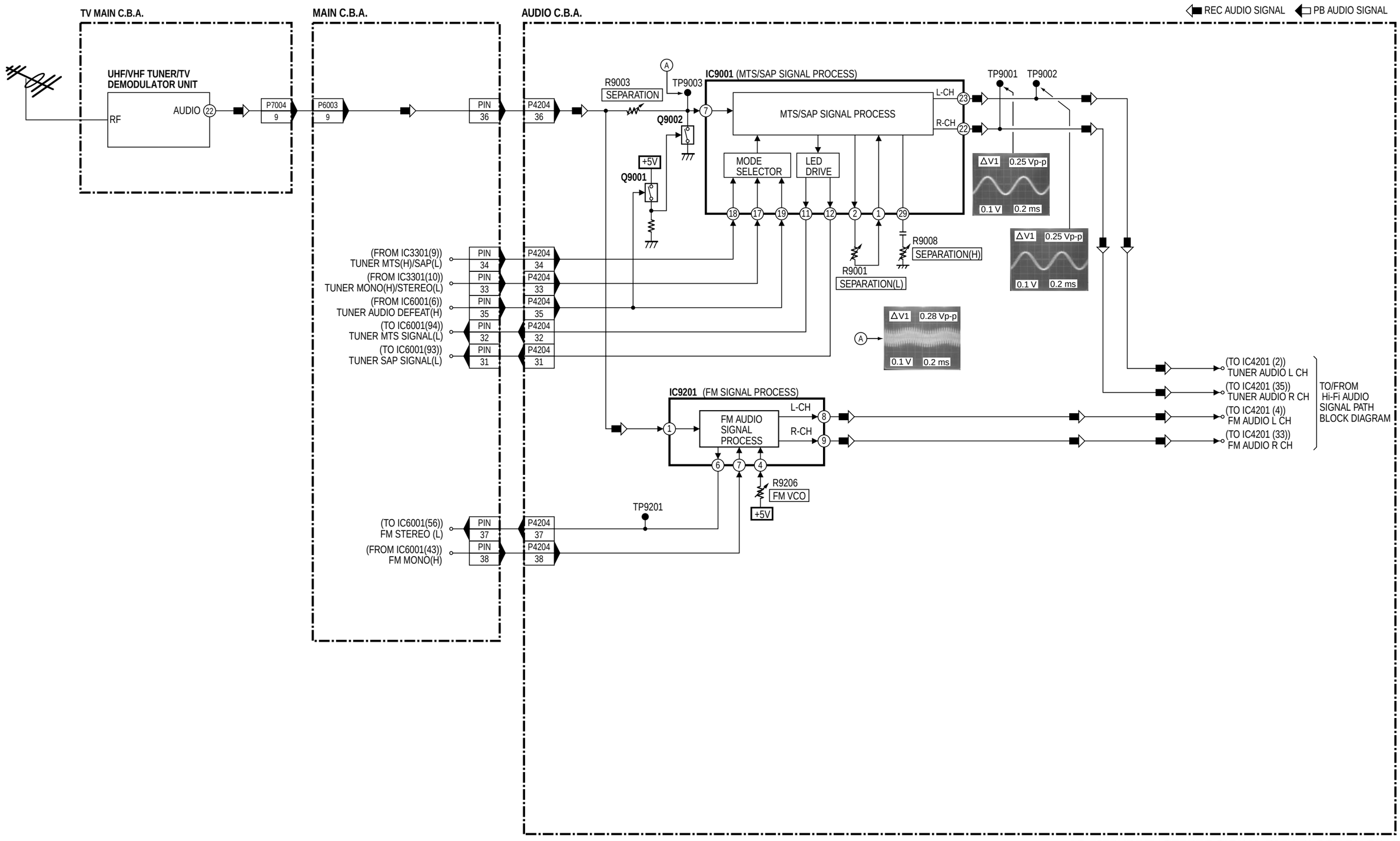

AG-527DVDE TV STEREO SIGNAL PATH BLOCK DIAGRAM

Hi-Fi AUDIO SIGNAL PATH BLOCK DIAGRAM

AUDIO C.B.A.
MAIN C.B.A.
Hi-Fi AUDIO/VIDEO HEAD AMP C.B.A.
IC4401 (Hi-Fi AUDIO HEAD AMP)
AGC DET
AGC AMP
REC AMP
PRE AMP
PRE AMP
IC4201 (Hi-Fi AUDIO PROCESS)
(FROM IC9001 (22)) TUNER AUDIO R-CH
(FROM IC9201(9)) FM AUDIO R-CH
FROM TV STEREO SIGNAL PATH BLOCK DIAGRAM
TUNER
LINE
FM
(R-CH)
L+R
L
Hi-Fi
MIX
R-CH Hi-Fi AUDIO SIGNAL PROCESS
ENV DET.
NORMAL
NORMAL
L-CH Hi-Fi AUDIO SIGNAL PROCESS
(L-CH)
(FROM IC9001 (23)) TUNER AUDIO L-CH
(FROM IC9201(8)) FM AUDIO L-CH
I²C CONTROL
AUDIO MUTE(H)
TP4205
TP4208
TP4207
P4207 8
P4207 4
P4207 6
PIN 8
PIN 4
PIN 6
P3001 13
P3001 14
P3001 15
P3501 13
P3501 14
P3501 15
(FROM IC6001 (27)) Hi-Fi HEAD SW
(FROM IC6001(29)) Hi-Fi DELAY REC(H)
P3503 9
P3503 8
P3503 7
Hi-Fi AUDIO R HEAD
Hi-Fi AUDIO L HEAD
AUDIO/VIDEO JACK C.B.A.
MAIN C.B.A.
AUDIO IN R-CH
AUDIO IN L-CH
P4791 6
P4791 4
P4005 6
P4005 4
PIN 40
PIN 42
P4205 40
P4205 42
P4203 24
P4203 26
PIN 24
PIN 26
(FROM IC3001 (69)) NORMAL AUDIO
(FROM IC3001 (73)) NORMAL AUDIO
TO/FROM AUDIO SIGNAL PATH BLOCK DIAGRAM
(FROM IC6001(62)) Hi-Fi AUDIO MUTE(H)
(FROM IC6001(18)) I²C SERIAL CLOCK
(TO/FROM IC6001(17)) I²C SERIAL DATA
(TO IC6001(9)) PB Hi-Fi AUDIO(H)
(FROM IC6001(35)) AUDIO AMP MUTE(H)
(FROM IC3301(12)) V CHIP MUTE(H)
(FROM IC6001(61)) DVD AUDIO(H)
D4304 NOT USED
D4303
AUDIO AMP C.B.A.
SPEAKER L-CH
SPEAKER R-CH
EARPHONE JACK
Q4201
MUTE -ON
Q4202
MUTE -ON
NOT USED
IC4301 (SW)
(L-CH)
(R-CH)
IC4302 (OP AMP)
IC4303 (OP AMP)
NOT USED
Q4304 Q4305
Q4303
IC4601 (TONE CONTROL)
AUDIO L-CH CONTROL
AUDIO R-CH CONTROL
I²C CONTROL
IC4501 (AMP)
AMP
P4206 1
P4206 3
P4206 5
P4505 1
P4505 3
P4505 5
P4502 2
P4502 5
P4502 3
P4502 4
P4591 2
P4591 5
P4591 3
P4591 4
P4503 2
P4503 1
P4508 2
P4508 1
MUTE -ON Q4501
MUTE -ON Q4502
NOT USED
J4201
J4202
DVD DECODER C.B.A.
FROM DVD BLOCK DIAGRAM
DVD AUDIO L CH
DVD AUDIO R CH
P8002 4
P8002 2
P4004 4
P4004 2
PIN 18
PIN 16
P4202 18
P4202 16
POWER SUPPLY C.B.A.
P4003 1
P4003 3
P4701 1
P4701 3
AUDIO OUT L-CH
AUDIO OUT R-CH

A: ΔV1 0.11 Vp-p, 50 mV, 0.2 ms
B: ΔV1 0.11 Vp-p, 50 mV, 0.2 ms
C: ΔV1 0.22 Vp-p, 0.1 V, 5 ms
D: ΔV1 0.28 Vp-p, 0.1 V, 0.5 ms
E: ΔV1 5Vp-p, 2 V, 5 ms
F: ΔV1 0.34 Vp-p, 0.1 V, 5 ms

AG-527DVDE Hi-Fi AUDIO SIGNAL PATH BLOCK DIAGRAM

SYSTEM CONTROL BLOCK DIAGRAM

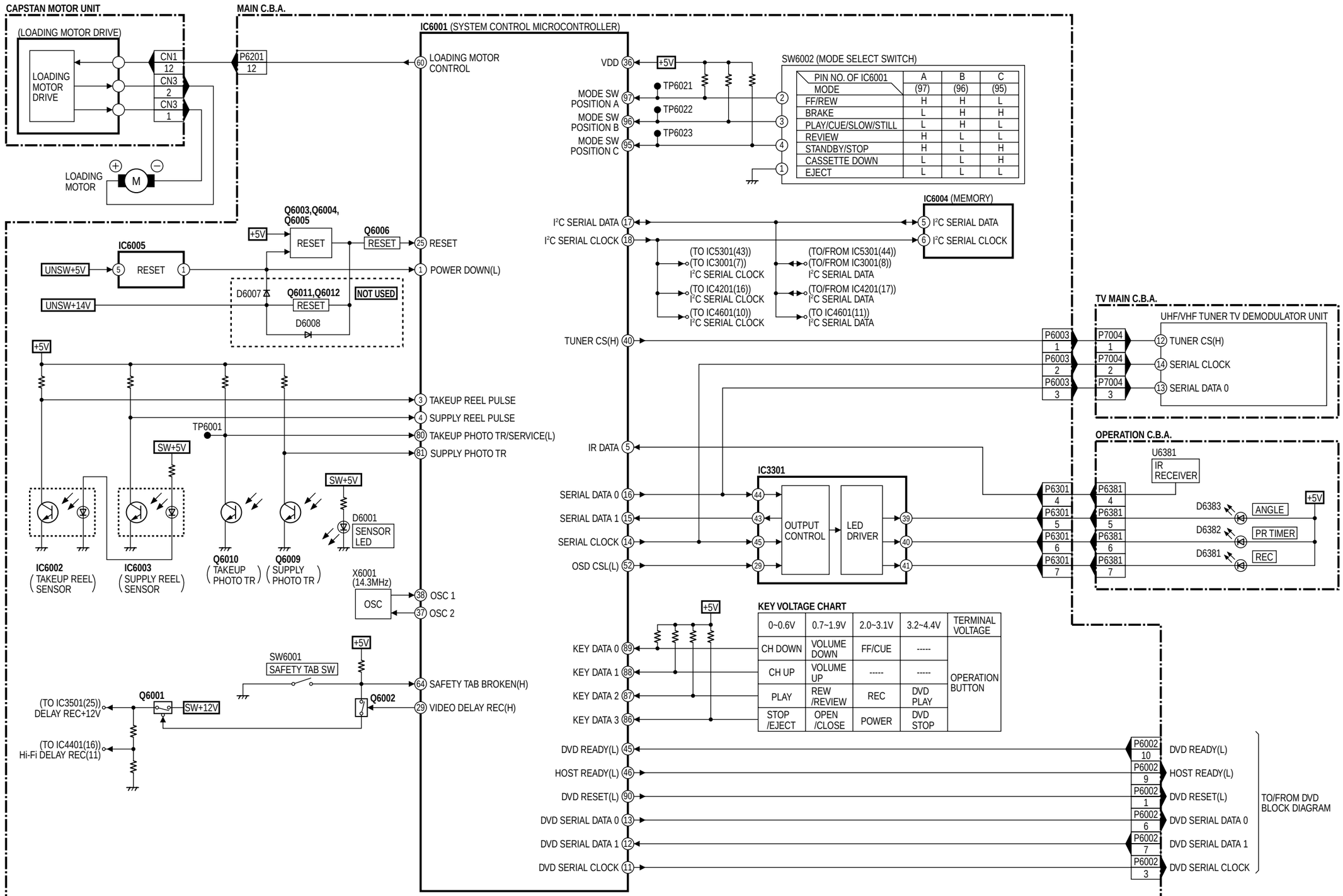

AG-527DVDE SYSTEM CONTROL BLOCK DIAGRAM

SERVO BLOCK DIAGRAM

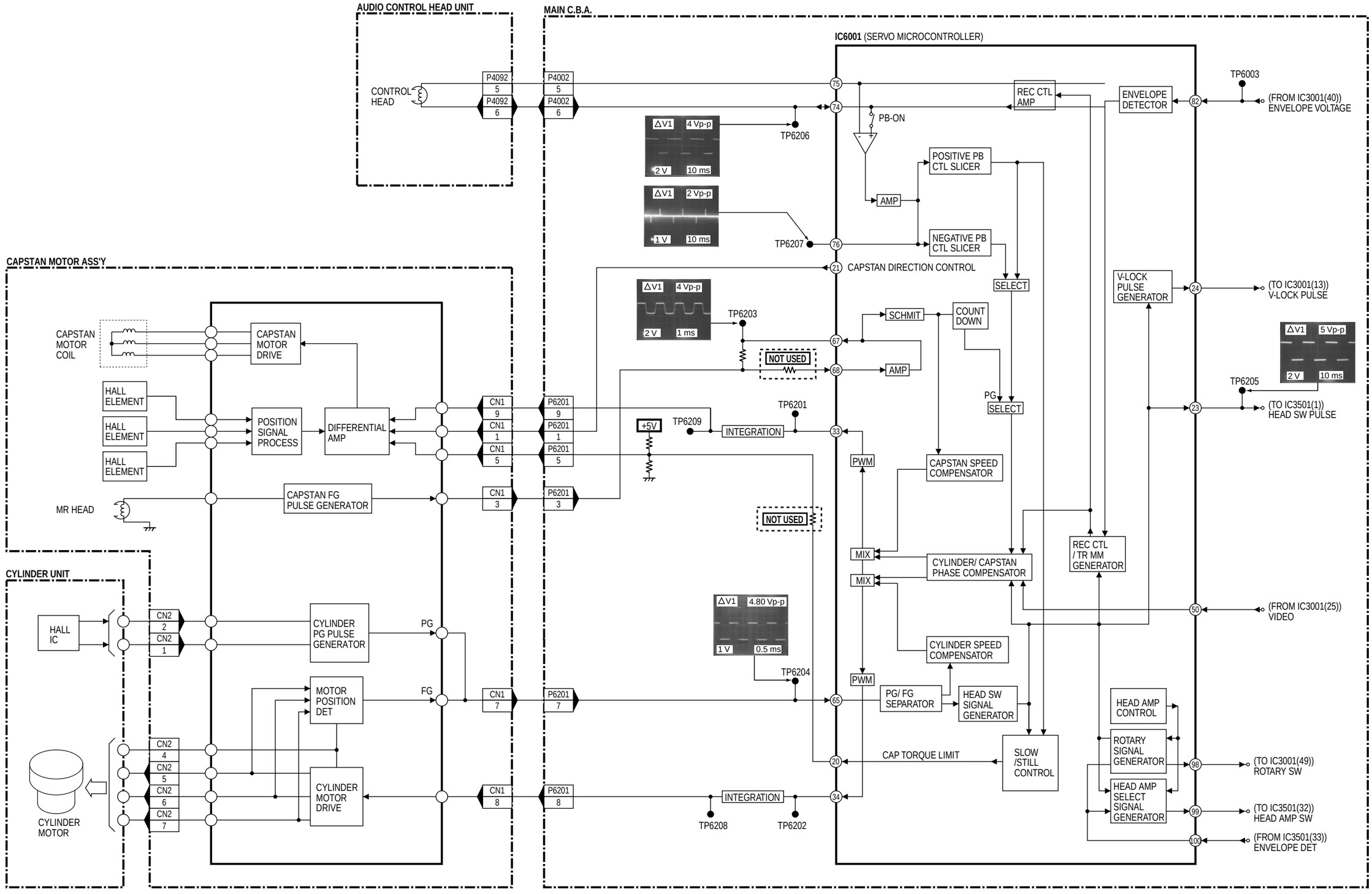

AG-527DVDE SERVO BLOCK DIAGRAM

TV Y/C PROCESS BLOCK DIAGRAM

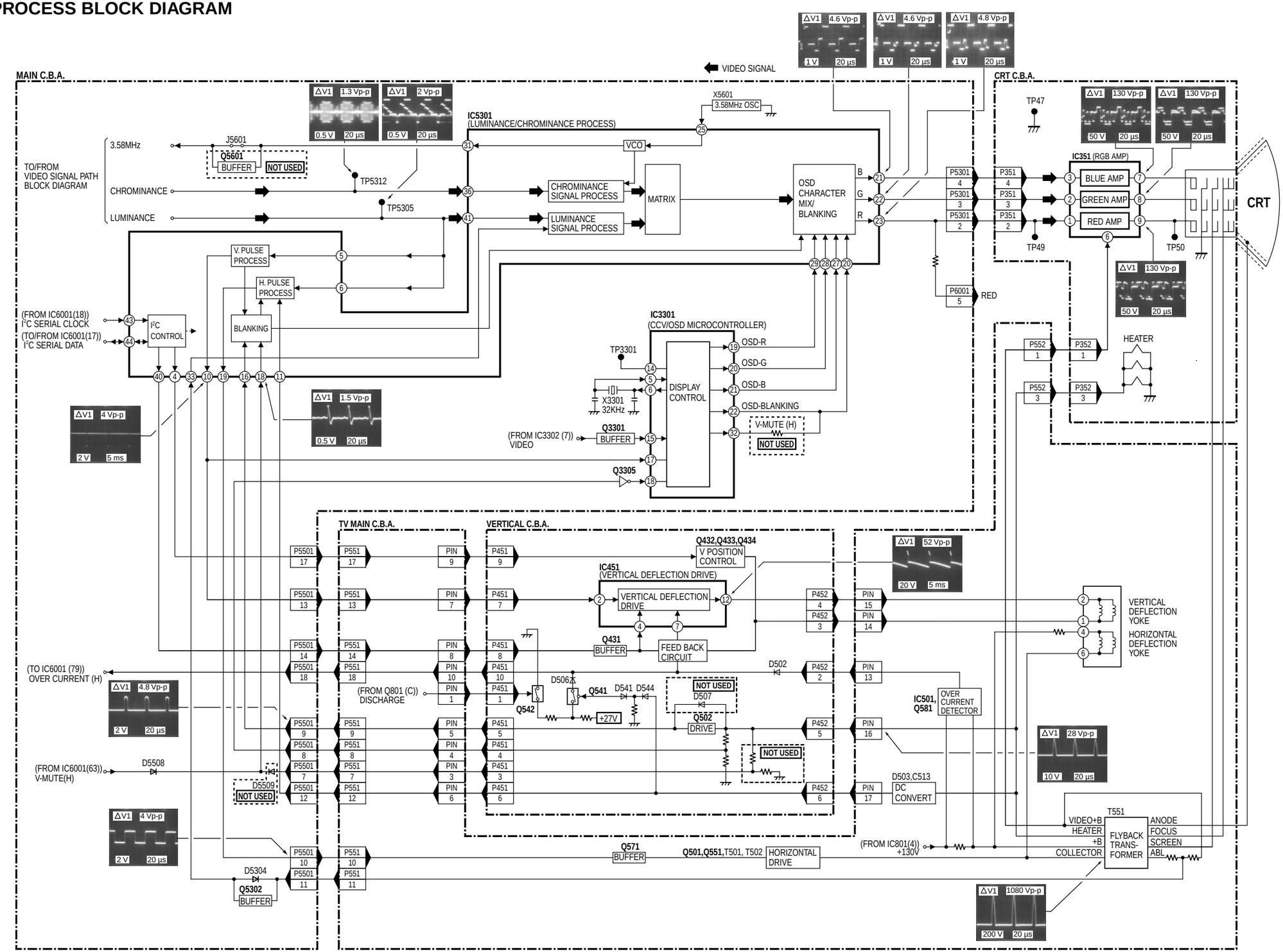

AG-527DVDE TV Y/C PROCESS BLOCK DIAGRAM

DVD BLOCK DIAGRAM

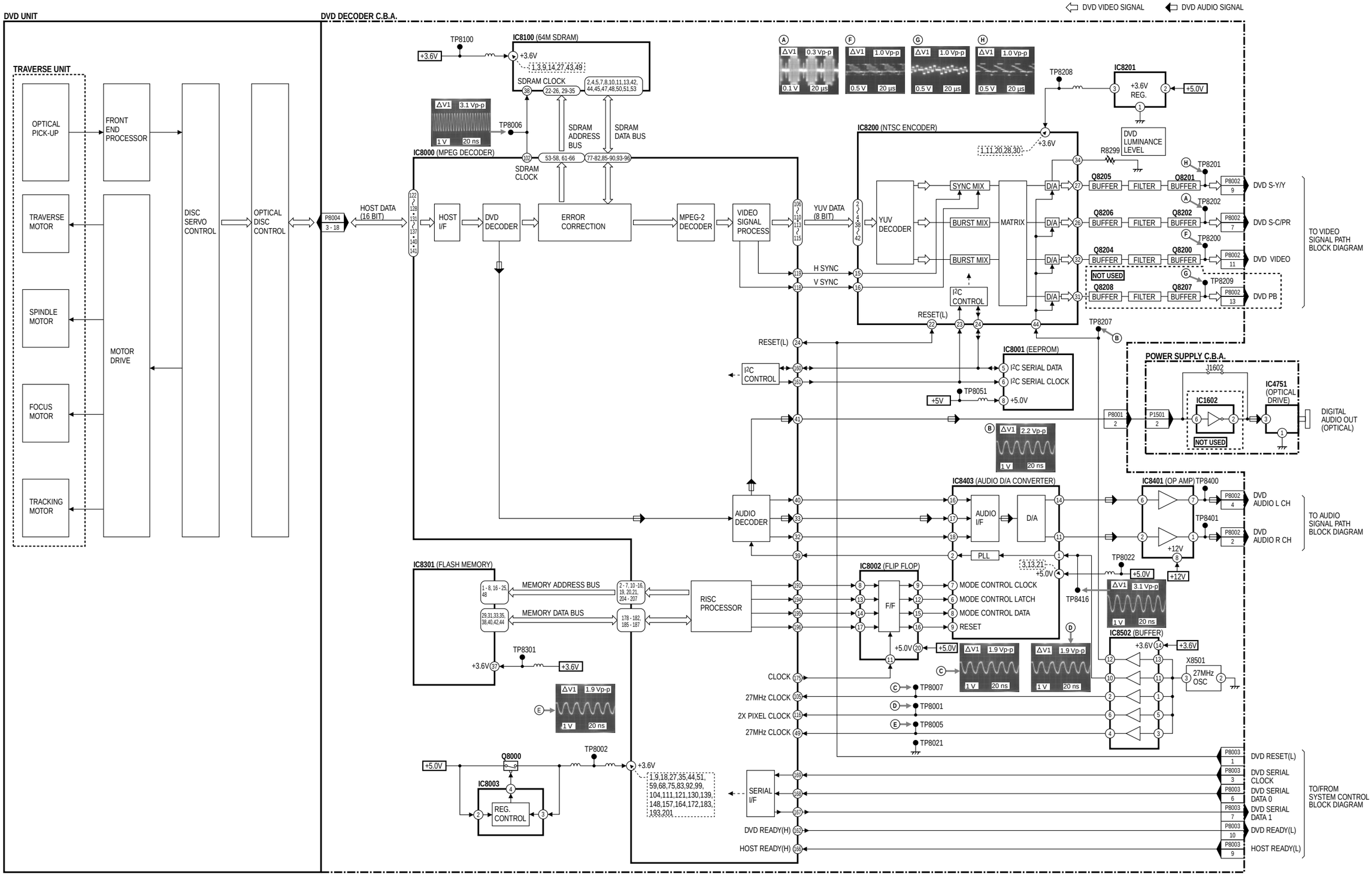

AG-527DVDE DVD BLOCK DIAGRAM

Troubleshooting Hints

How to confirm which of DVD circuit or other circuits is defective.

1) Confirm DVD operation and VCR operation

1. Playback the VHS tape.
2. Playback the DVD disk.

- Both NG → Main C.B.A. is defective. Repair Main C.B.A.
- No PB VCR only → Main C.B.A. is defective. Repair Main C.B.A.
- No PB DVD only → DVD circuit is defective. Then, perform troubleshooting refering the "How to confirm which of DVD Unit or DVD Decoder C.B.A. is defective."

How to confirm which of DVD Unit or DVD Decoder C.B.A. is defective.

NOTE:
Host communication may not be done correctly between IC6001 on the Main C.B.A. and IC8000 on the DVD Decoder C.B.A. when there is a problem on the DVD Decoder C.B.A.
In that case, the unit is automatically switched to VCR mode after approx. 30 seconds even in DVD mode becouse the DVD Decoder C.B.A. is shut down. (Check the VCR mode indicator and DVD mode indicator on the Multi Function Display.)
Check the voltage during 30 seconds which the unit can be remained in DVD mode.

First confirm that other C.B.A. are checked O.K. other than DVD Unit and DVD Decoder C.B.A.
Check points: 1. All Power Supply Voltages for DVD circuit.
(P1501 pin 6, 7, 8, 9, P1503, P1505 on Main C.B.A.)
2. Output signal from DVD Decoder C.B.A.
(P3001 pin7, 9, 11, 13 on Main C.B.A.)

↓

Check the connections between the DVD Decoder C.B.A. to Main C.B.A. and Power Supply C.B.A.

↓

Check the connector cable (IDE cable) and the connector cable (Power) from the DVD unit.

↓

Set the unit to DVD mode.

- The unit is automatically switched to VCR mode after approx. 30 seconds even in DVD mode. → DVD Decoder C.B.A. is defective. Then, perform troubleshooting refering the "Troubleshooting Hints of DVD Decoder C.B.A."

OK ↓

Perform the self diagnostic test function.
Refer to "SELF DIAGNOSTIC TEST FUNCTION FOR DVD UNIT."

- Error Code (10, 20, 30, 40, 50, 60, 70) is appears. → DVD Unit is defective. Replace DVD Unit.

Error Code (00) is appears. ↓

Playback the test/normal DVD disk.

- If the Message "PLEASE CHECK THE DISK, AND FOR STAINS OR SCRATCHES ON DISK" appears. → DVD Unit is defective. Replace DVD Unit.
- If there is problem of audio or picture, even when it can playback. → DVD Decoder C.B.A. is defective. Replace DVD Decoder C.B.A.

Troubleshooting Hints of DVD Decoder C.B.A.

Cause: Decoder Problem

Check voltage at TP8002 on the DVD Decoder C.B.A. Is it +3.6V ?
- NG → Check IC8003. (REGULATOR CONTROL)
  - NG → Replace IC8003. (REGULATOR CONTROL)
  - OK → Check Power line.
- OK ↓

Check signal at TP8005, TP8007 and TP8001 on the DVD Decoder C.B.A.(27 MHz clock)
- NG → Check X8501.
  - NG → Replace X8501.
  - OK → Replace IC8502. (BUFFER)

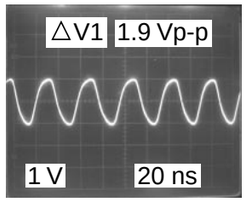

TP8005

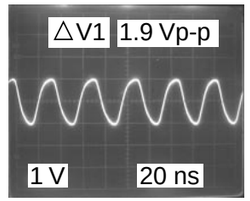

TP8007

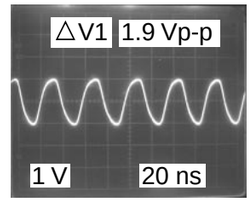

TP8001

Cause: SDRAM Problem

Check voltage at TP8100 on the DVD Decoder C.B.A. Is it +3.6V ?
- NG → Check Power line.
- OK ↓

Check signal at TP8006 on the DVD Decoder C.B.A. (108 MHz clock)
- NG → Replace IC8000. (NTSC DECODER)
- OK ↓

Replace IC8100. (64M SDRAM)

Cause: NTSC Encoder Problem

Check voltage at TP8208 on the DVD Decoder C.B.A. Is it +3.6V ?
- NG → Check IC8201. (REGULATOR CONTROL)
  - NG → Replace IC8201. (REGULATOR CONTROL)
  - OK → Check Power line.
- OK ↓

Check signal at TP8207 on the DVD Decoder C.B.A. (27 MHz clock)
- NG → Check X8501.
  - NG → Replace X8501.
  - OK → Replace IC8502. (BUFFER)
- OK ↓

Replace IC8200. (NTSC ENCODER)

Cause: Audio DAC Problem

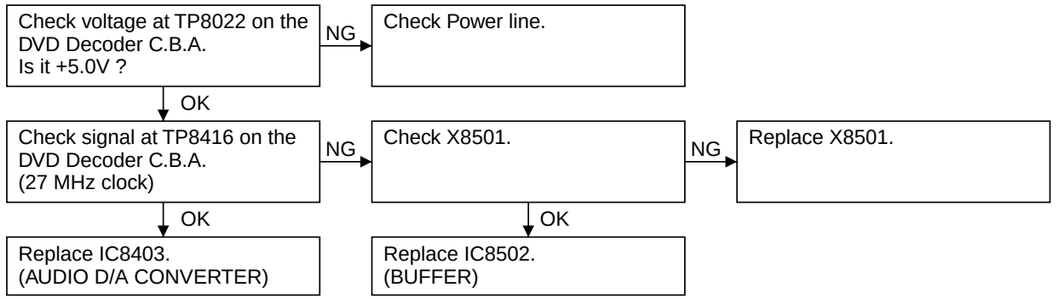

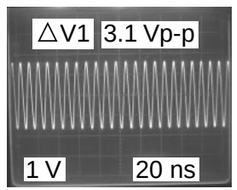

TP8006

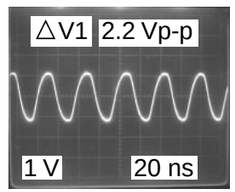

TP8207

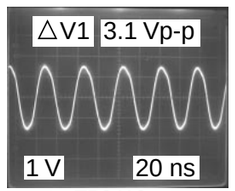

TP8416

Cause: EEPROM Problem

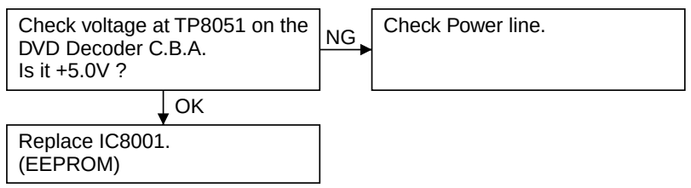

Cause: Flash ROM Problem

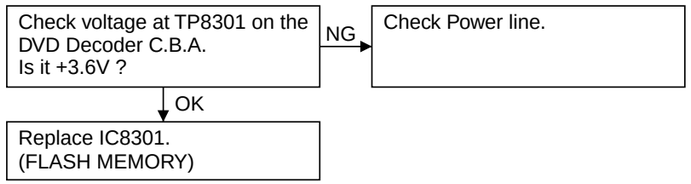

MAIN C.B.A. LSEP2021A

NOTE:
FOR SCHEMATIC DIAGRAM AND CIRCUIT BOARD LAYOUT NOTES, REFER TO BEGINNING OF SCHEMATIC SECTION.

CAUTION: FOR CONTINUED PROTECTION AGAINST FIRE HAZARD, REPLACE ONLY WITH THE SAME TYPE 1.6A 125/250V FUSE.
ATTENTION: POUR UNE PROTECTION CONTINUE LES RISQUES D'T INCENDIE N'I UTILISERQUE DES FUSIBLE DE MÉME TYPE 1.6A 125/250V

IMPORTANT SAFETY NOTICE:
COMPONENTS IDENTIFIED BY THE SIGN ⚠ HAVE SPECIAL CHARACTERISTICS IMPORTANT FOR SAFETY. WHEN REPLACING ANY OF THESE COMPONENTS, USE ONLY THE SPECIFIED PARTS.

NOTE:
CIRCUIT BOARD LAYOUT INCLUDES COMPONENTS WHICH ARE NOT USED. PLEASE REFER TO THE SCHEMATIC DIAGRAM AND PARTS LIST FOR PROPER PARTS CONTENT.

HOT CIRCUIT.BE CAREFUL AND USE AN ISOLATION TRANSFORMER WHEN SERVICING.

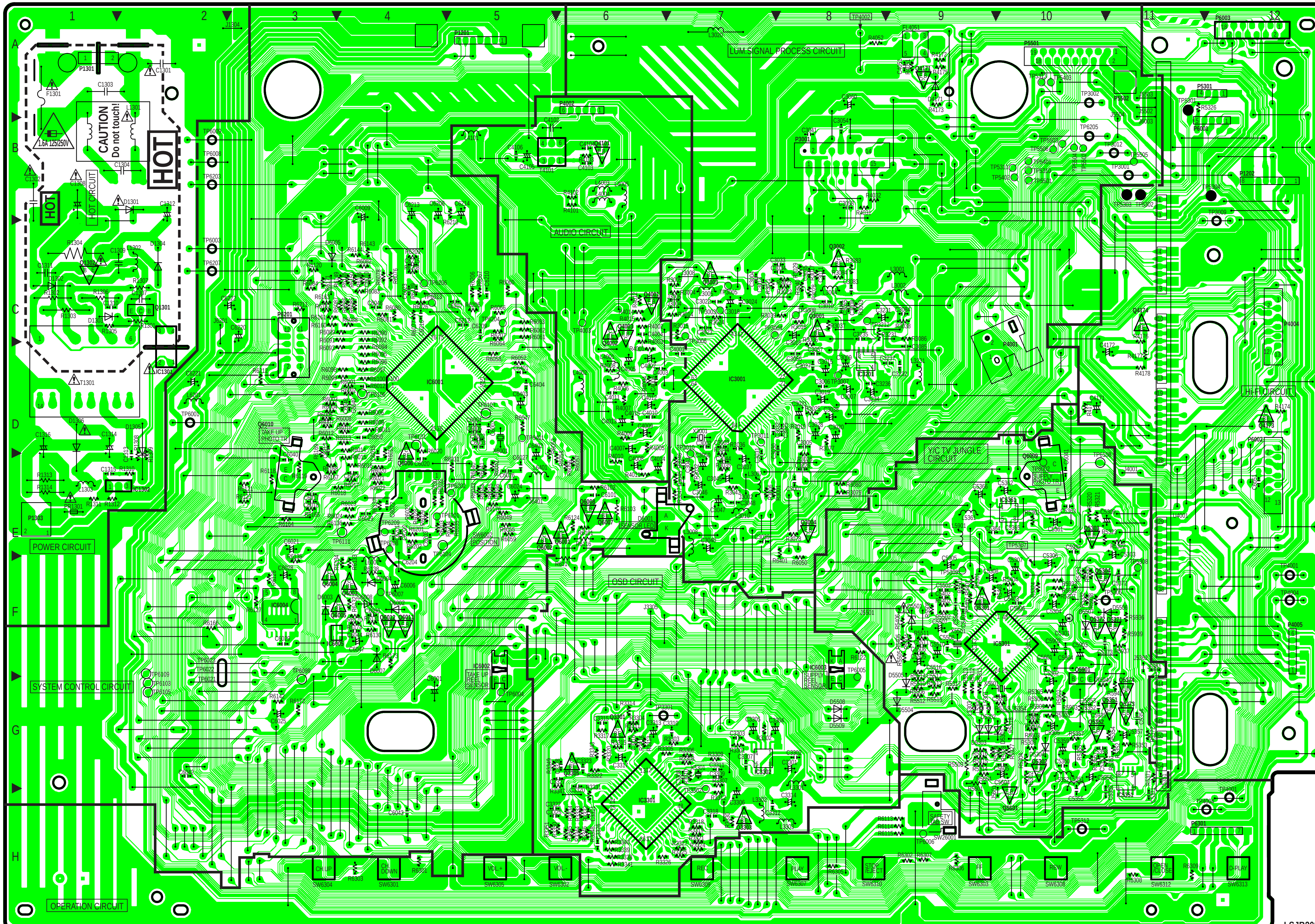

LSJB2021

MAIN C.B.A. LSEP2021A
AG-527DVDE

NOTE:
CIRCUIT BOARD LAYOUT INCLUDES COMPONENTS WHICH ARE NOT USED.
PLEASE REFER TO THE SCHEMATIC DIAGRAM AND PARTS LIST FOR PROPER PARTS CONTENT.

NOTE:
FOR SCHEMATIC DIAGRAM AND CIRCUIT BOARD LAYOUT NOTES,
REFER TO BEGINNING OF SCHEMATIC SECTION.

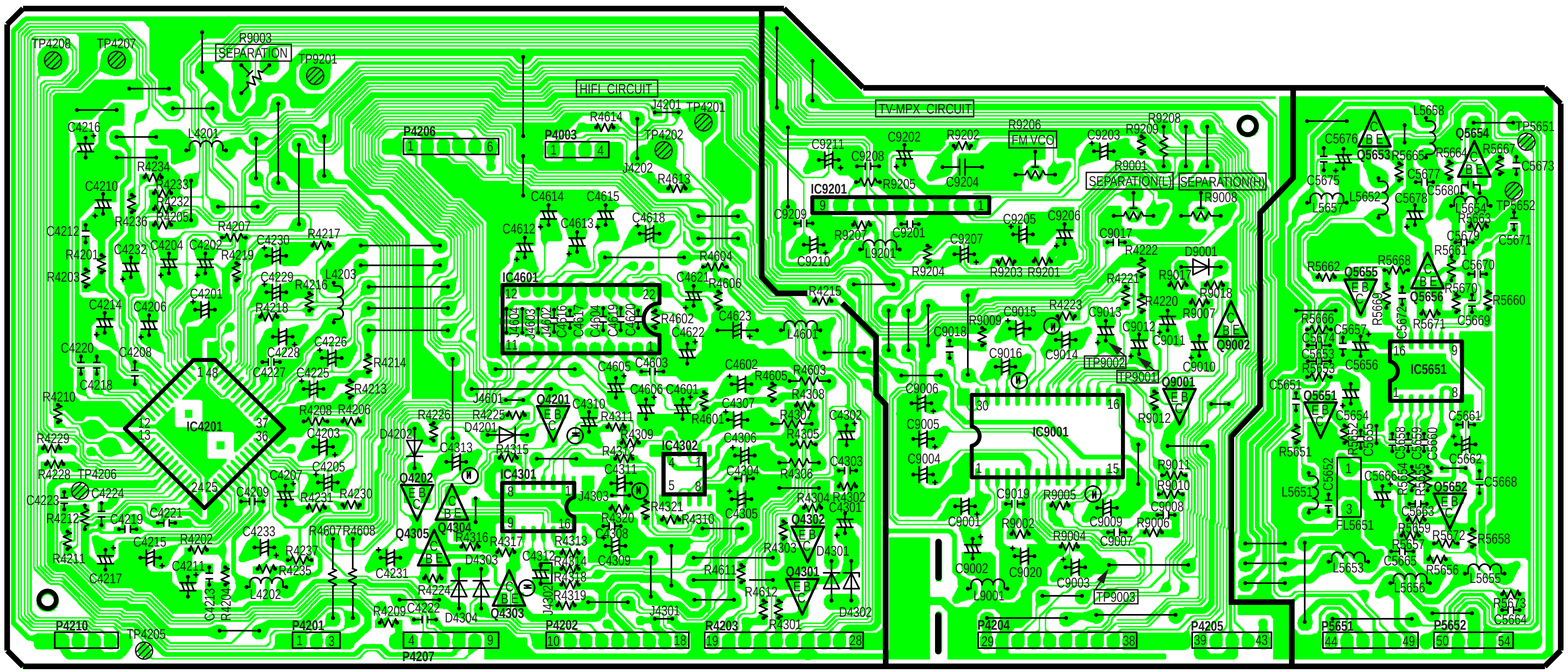

VJBS4038

TV MAIN C.B.A. LRP61012D

CAUTION: FOR CONTINUED PROTECTION AGAINST FIRE HAZARD, REPLACE ONLY WITH THE SAME TYPE 4A 125/250V FUSE.
ATTENTION: POUR UNE PROTECTION CONTINUE LES RISQUES D' INCENDIE N' UTILISERQUE DES FUSIBLE DE MÉME TYPE 4A 125/250V

4A 125/250V

IMPORTANT SAFETY NOTICE:
COMPONENTS IDENTIFIED BY THE SIGN ⚠ HAVE SPECIAL CHARACTERISTICS IMPORTANT FOR SAFETY. WHEN REPLACING ANY OF THESE COMPONENTS, USE ONLY THE SPECIFIED PARTS.

NOTE:
CIRCUIT BOARD LAYOUT INCLUDES COMPONENTS WHICH ARE NOT USED.
PLEASE REFER TO THE SCHEMATIC DIAGRAM AND PARTS LIST FOR PROPER PARTS CONTENT.

NOTE:
FOR SCHEMATIC DIAGRAM AND CIRCUIT BOARD LAYOUT NOTES, REFER TO BEGINNING OF SCHEMATIC SECTION.

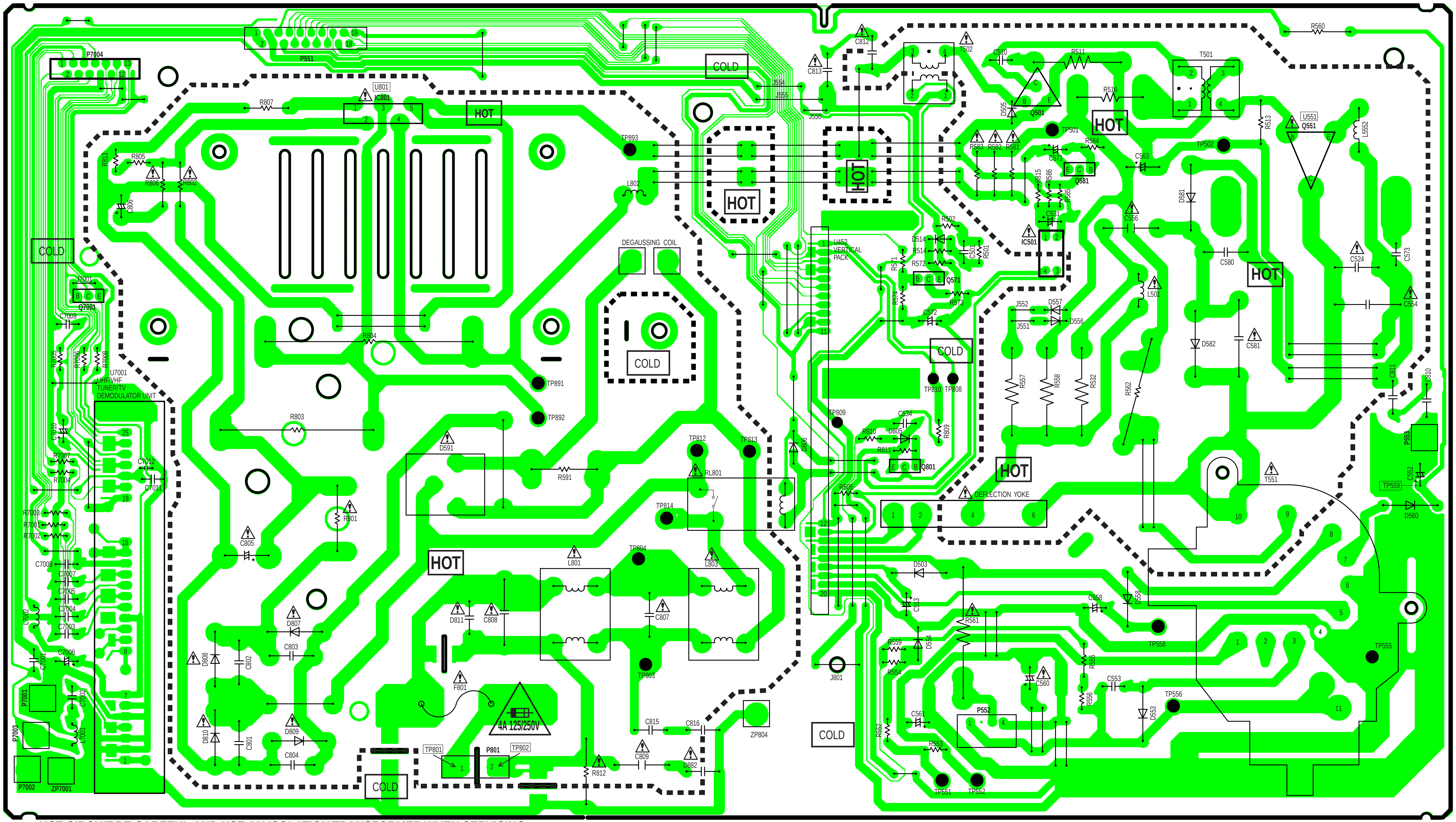

HOT CIRCUIT.BE CAREFUL AND USE AN ISOLATION TRANSFORMER WHEN SERVICING.

LRP61012

TV MAIN C.B.A. LRP61012D
AG-527DVDE

Other ManualsLib Projects

www.manualslib.com

www.manualslib.de

www.manualslib.es

www.manualslib.fr

www.manualslib.nl

www.manualslib.mx

www.manualslib.tech 30+ Languages